ULTRA-THIN LED DOWNLIGHT PLT-12403

DESCRIPTION

Add downlights as part of new construction or renovation projects with these easy to install ultra-thin LED downlights.

FEATURES

- Energy efficient replacement for 60W incandescents
- High color rendering index (CRI) of 90 makes color appear more naturally
- Comes with remote junction box that allows for installation around obstructions
- IC Rated and air-tight
- Dimmable; see Compatible Dimmer section for full list of dimmers

LISTINGS

- ETL Listed for damp locations
- IC Rated
- RoHS
- Energy Star

PERFORMANCE

- CRI: 90+
- CCT: 5000K
- Rated Lifetime L70: 50,000 hours

ELECTRICAL

- Power Factor: >0.9
- Input Voltage: 120V
- Surge Protection: 2.5kV

THERMAL

- -4°F to 104°F (-20°C to 40°C) operating temperature

CONSTRUCTION

- Aluminum body with aluminum trim, both with white finish
- White translucent acrylic lens

project name	type
catalog number	
comments	voltage
approved by	date

WARRANTY

- 5-year limited warranty;
  see pltsolutions.com for warranty details

APPLICATIONS

- Offices
- Lobbies
- Conference Rooms
- Living Rooms
- Hallways
- Bathrooms
- Laundry Rooms

PERFORMANCE	**Power Consumption**	9 Watt
	Lumens	600
	Efficacy (LPW)	67
	CRI	90+
	CCT	5000K
	Beam Angle	110°
	Life (L70)	50,000
ELECTRICAL	**Power Factor**	>0.9
	Input Voltage	120V
CONSTRUCTION	**Finish**	White
	Lens	Frosted
LISTINGS	**Certifications**	ETL Listed; Energy Star
	Material Usage	RoHS – No mercury or lead
	Environment	Damp Location Rated

PERFORMANCE SUMMARY

Item #	Size	Lumens	Wattage	LPW	Voltage	Replaces	CCT	CRI	Life/ Hours	Dimmable
PLT-12403	4"	600	9	67	120V	60W Incan.	5000K	90+	50,000	Yes

DIMMER COMPATIBILITY

Brand	Model #
Lutron	PD-6WCL
Lutron	DVCL-153P
Lutron	SFTU-5A3P
Lutron	DMD-LE3-D
Lutron	CTCL-153P
Lutron	DV-600P
Leviton	6621
Leviton	6672
Leviton	IPL06-10Z
Cooper	SI06P

DIMENSIONS

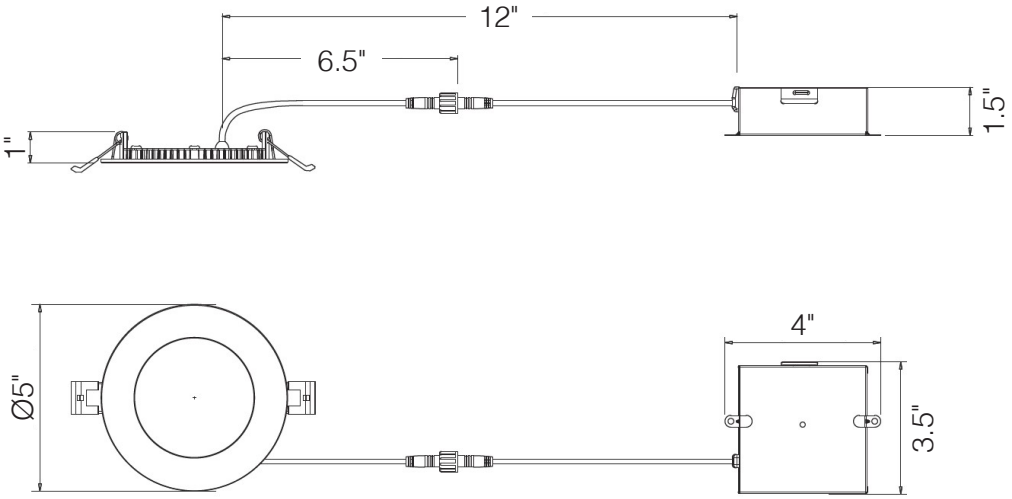

DIMENSIONS:

Outside Diameter: 5"

Inside Diameter: 3.25"

Height: 1"

Cable Length (downlight half): 6.5"

Weight: 0.6 lbs

Junction Box Length: 3.5"

Junction Box Width: 4"

Junction Box Height: 1.5"

Combined Cable Length: 12"

CUT OUT: Ø 4.25"

WARNINGS

- Only use this LED downlight with the dimmers listed in the compatibility list. Using this downlight with incompatible dimmers may cause performance issues including humming, buzzing, flickering, and poor dimming performance.
- Cutout size requirements: 4” – 4.25”