# NORA SERIES TRACK LIGHTING FIXTURES

**WARNING:** ***FIRE/ELECTRICAL HAZARD***

This equipment is intended to be installed only by qualified personnel. The installation must be made in accordance with the current edition of the National Electrical Code and all applicable state and local building codes. The final installation must be approved by the appropriate, qualified electrical/building inspector(s). Improper installation may result in a fire or electrical hazard. Be sure the electrical power to the circuit has been disconnected before installing this electrical system.

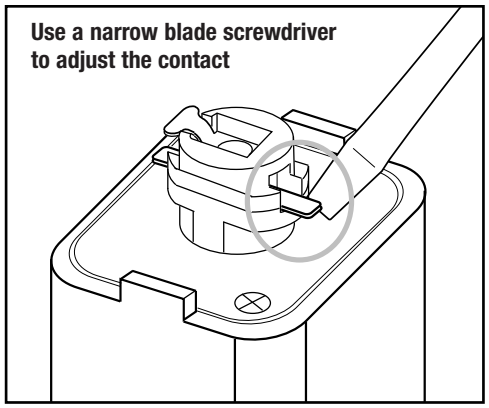


**FOR USE WITH NORA OR COMPATIBLE TRACK SYSTEMS**

**To set contacts for one or two circuit operation:**

1) All Nora track fixtures are preset at factory for single circuit track installation - or circuit #1 on Nora two-circuit track.
2) To change contact assembly to install fixture to circuit #2 of Nora two-circuit track, use a narrow blade screwdriver, as shown, to lift the positive contact (opposite neutral and ground contacts) to the highest position possible.
3) The track fixture is now ready for installation.

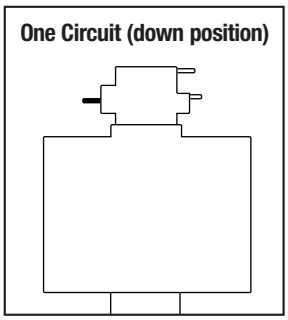


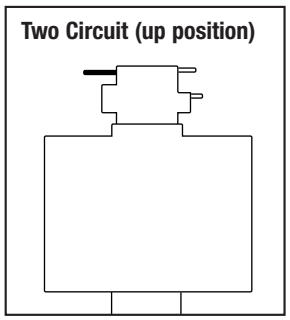


**To install track fixture:**

1) Hold fixture by the mounting adapter.
2) Match the polarity line on the fixture (either line or straight arrow) to the polarity groove on the track. Note that the fixture will not yet be able to be inserted into the track rail.
3) Turn the fixture counterclockwise (left) until the contact head can be inserted into the track.
4) While holding the adapter sleeve to the track, using the other hand, push the fixture straight into the track as far as possible.
5) While continuing place pressure on the fixture, rotate the contact head adapter clockwise (right) until the adapter sleeve snaps into the track groove and locks into place. Note that the polarity lines on both the track and fixture are in the same position.

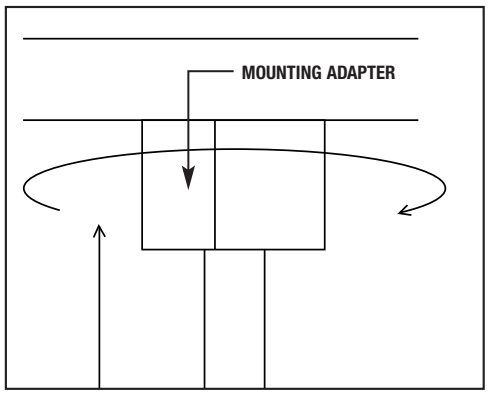


**To remove track fixture:**

1) Firmly grasp contact adapter sleeve and pull down.
2) Rotate contact counterclockwise (left) approximately 90 degrees.
3) Pull fixture down to remove completely from track groove.

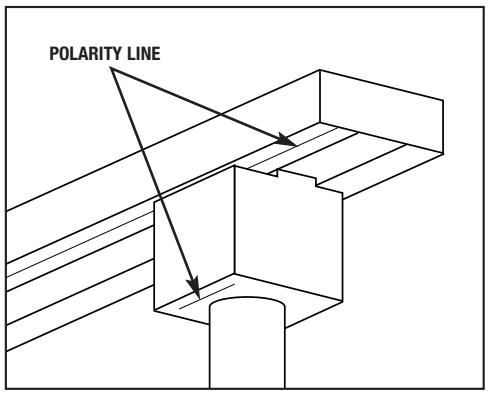


NORA LIGHTING
6505 Gayhart St., Commerce, CA 90040
www.NoraLighting.com