LED General Purpose Strip Luminaire Installation Instructions

TCPGPS2, TCPGPS4 & TCPGPS8

IMPORTANT: Install by Qualified Electrician. Please read instructions before proceeding with installation. Keep these instructions for future reference.

⚠ WARNING

RISK OF ELECTRIC SHOCK

- Turn off power prior to inspection, installation or removal of fixture.
- Ensure electrical enclosure is properly grounded in accordance with National Electrical Code (NEC).

RISK OF FIRE

- Product must be installed in accordance with NEC and/or applicable local codes by a qualified licensed electrician.
- Wiring connections should be made with UL approved wire connectors.

THIS PRODUCT MUST BE INSTALLED IN ACCORDANCE WITH THE APPLICABLE INSTALLATION CODE BY A PERSON FAMILIAR WITH THE CONSTRUCTION AND OPERATION OF THE PRODUCT AND THE HAZARDS INVOLVED

ATTENTION

- Use care when handling the luminaire. Do not drop, press, or bend the light panel to avoid damage during installation.
- Prior to installation, carefully unpack and properly inspect luminaire for any damage or loose connections that may have occurred during shipping.

ELECTRICAL CONNECTION

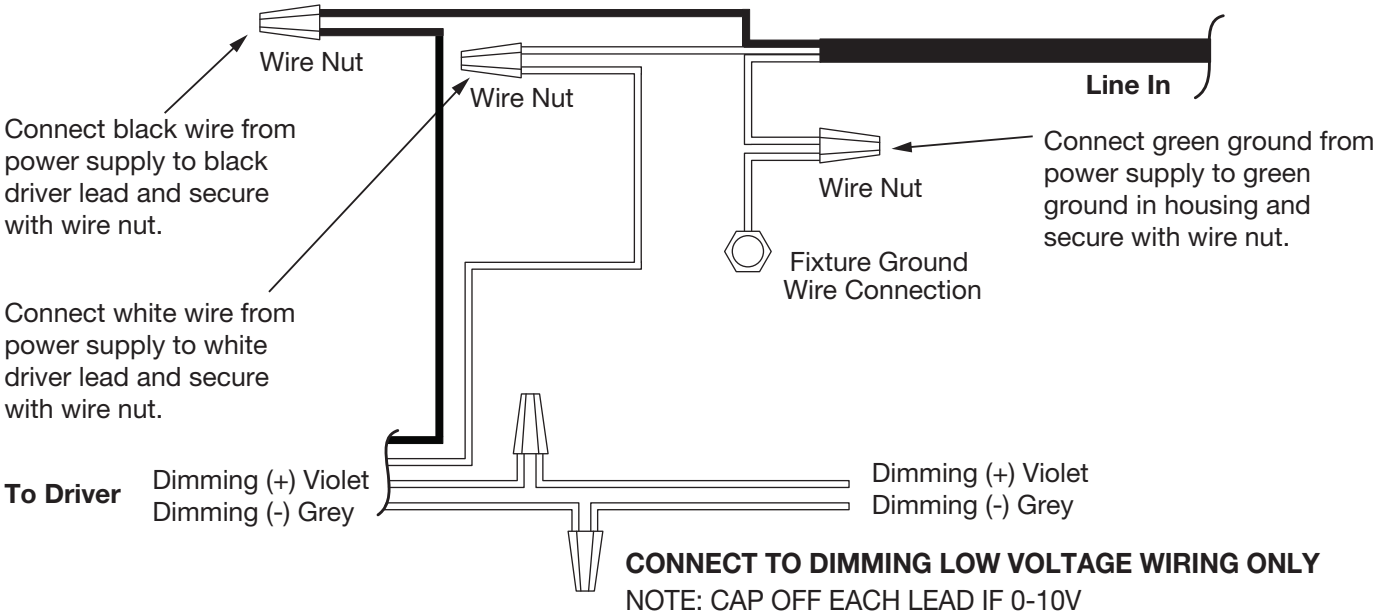

CONNECT TO DIMMING LOW VOLTAGE WIRING ONLY

NOTE: CAP OFF EACH LEAD IF 0-10V NOT BEING CONNECTED

NOTE: *For connection to dimming controls, consult control manufacturer's wiring instructions.*

USE ONLY UL LISTED WIRING CONNECTORS AND UL LISTED WIRING HAVING A MINIMUM TEMPERATURE RATING AS SHOWN ON THE FIXTURE LABEL.

continued on back

TCP®
325 Campus Dr. | Aurora, Ohio 44202 | P: 800-324-1496 | tcpi.com
©TCP OCT 2017/WF96556

Surface Mounting

- Secure luminaire base to mounting surface by inserting customer supplied #8 anchor screws, toggle bolts or suitable fasteners, (depending on structural conditions) into key hole slots on the top side of the luminaire base. (**See Figure C)**

Chain Mounting with V Hook

- Attach customer supplied V-Hooks to each end of the luminaire base using designated key hole slots. **(See Figure B)**
- Attach customer supplied chain to the V-Hooks and mounting surface per applicable codes.

T-Bar Clip Mounting

- Attach customer supplied T-Bar clips to the designated opening on the luminaire. **(See Figure D)**
- Bring luminaire into T-Bar ceiling grid and secure luminaire to grid per applicable codes.

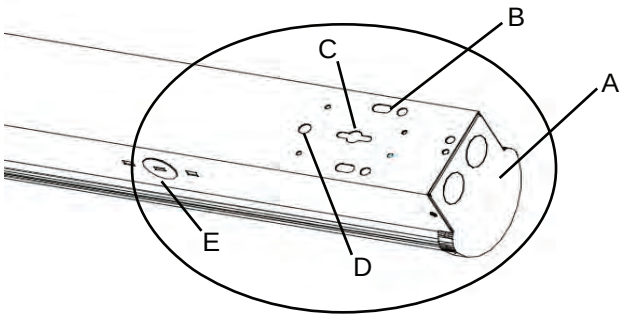

Figure

A: End Cap
B: Chain Mounting with V Hook
C: Surface Mounting
D: T-Bar Clip Mounting Hole
E: Wiring Knockouts