MaxLite® LED Bullet Flood Fixtures

General Safety Information

Picture is for illustration purposes only. Your model may vary.

- To reduce the risk of death, personal injury or property damage from fire, electric shock, falling parts, cuts/abrasions, and other hazards read all warnings and instructions included with and on the fixture box and all fixture labels.

- Before installing, servicing, or performing routine maintenance upon this equipment, follow these general precautions.

- Commercial installation, service and maintenance of luminaires should be performed by a qualified licensed electrician.

- DO NOT INSTALL DAMAGED PRODUCT!

- This fixture is intended to be connected to a properly installed and grounded UL listed junction box.

WARNING:
RISK OF ELECTRICALSHOCK
- Turn off electrical power at fuse or circuit breaker box before wiring fixture to the power supply.
- Turn off the power when you perform any maintenance.
- Verify that supply voltage is correct by comparing it with the luminaire label information.
- Make all electrical and grounded connections in accordance with the National Electrical Code and any applicable local code requirements.
- All wiring connections should be capped with UL approved wire connectors.

CAUTION:
RISK OF INJURY
- Wear gloves and safety glasses at all times when removing luminaire from carton, installing, servicing or performing maintenance.
- Avoid direct eye exposure to the light source while it is on.
- Account for small parts and destroy packing material, as these may be hazardous to children.

CAUTION:
RISK OF FIRE
- Keep combustible and other materials that can burn away from luminaire and lamp/lens.
- MIN 90°C SUPPLY CONDUCTORS.

Operating Temperature: -22°F to 104°F

MaxLite® LED Bullet Flood Fixtures

Wiring:

CAUTION: Turn off electrical power at fuse or circuit breaker box before wiring fixture to the power supply.

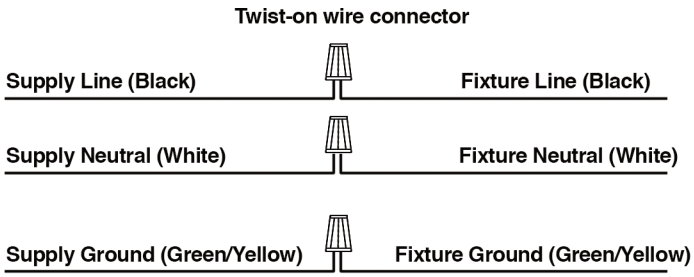

Wiring layout without Photocell

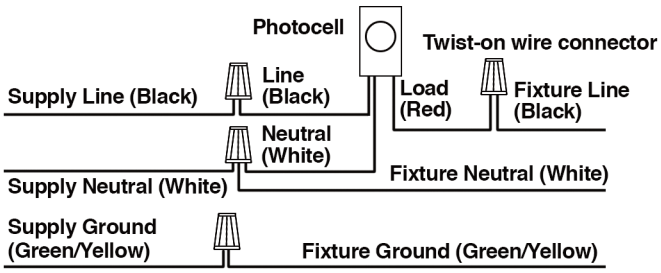

Wiring layout with Photocell

Mounting Instructions

Wall mounting:

1. Inspect components to ensure that male and female port threads and sealing surfaces are free of burs, nicks and scratches or any foreign material.
2. Thread Arm into cover plate (Not supplied) with weatherproof silicone sealant or Teflon tape around arm thread.
3. Make wire connection as shown in the wiring section.
4. Thread Cover plate onto Junction box and apply weatherproof silicone sealant around the edge of junction box.
5. Aim fixture to desired direction and fasten then locknut and arm screw.

Ground mounting:

1. Inspect components to ensure that male and female port threads and sealing surfaces are free of burs, nicks and scratches or any foreign material.
2. Thread Arm into Post top (Not supplied) with weatherproof silicone sealant or Teflon tape around arm thread.
3. Make wire connection as shown in the wiring section.
4. Aim fixture to desired direction and fasten then locknut and arm screw.

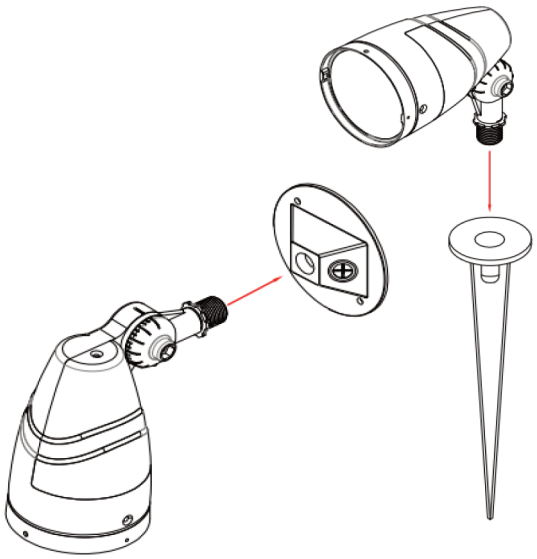

MaxLite® LED Bullet Flood Fixtures

Warranty

LIMITED WARRANTY FOR CERTAIN MAXLITE® LED LIGHTING FIXTURES, SPECIFICALLY WALL PACKS; FLOOD LIGHT; AREA LIGHT; CANOPY; GARAGE; PARKING; SECURTIY LIGHT; VAPOR TIGHT AND ROADWAY.

This limited warranty is provided by the MaxLite company described below ("Seller") to you as the original purchaser of the LED lighting product that is identified on Seller's invoice reflecting its original purchase (the "Product"). The Seller is the MaxLite Company identified as such on the invoice. This limited warranty may be transferred to subsequent purchasers of the Product, provided that such Product is resold in new condition and in its original packaging. Seller warrants that the Product, when delivered in new condition and in its original packaging, will be free of defects in material and workmanship for a period of FIVE (5) YEARS from the date of original purchase or the number of hours used has not exceeded the L70 life stated for each LED fixture. The determination of whether the Product is defective shall be made by Seller in its sole discretion with consideration given to the overall performance of the Product. A Product shall not be considered defective solely as a result of the failure of individual LED components to emit light if the number of inoperable components is less than 10% of the total number of LED components in the Product.

If Seller determines the Product is defective, Seller will elect, in its sole discretion, to refund you the purchase price of the Product, repair the Product or replace the Product. This limited warranty does not apply to loss or damage to the Product caused by: negligence; abuse; misuse; mishandling; improper installation, storage or maintenance; damage due to fire or acts of God; vandalism; civil disturbances; power surges; improper power supply; electrical current fluctuations; corrosive environment installations; induced vibration; harmonic oscillation or resonance associated with movement of air currents around the Product; alteration; accident; failure to follow installation, operating, maintenance or environmental instructions prescribed by Seller or applicable electrical codes; or improper service of the Product performed by someone other than Seller or its authorized service provider. This limited warranty excludes field labor and service charges related to the repair or replacement of the Product. THIS LIMITED WARRANTY IS VOID IF THE PRODUCT IS NOT USED FOR THE PURPOSE FOR WHICH IT IS DESIGNED.

Seller reserves the right to utilize new, reconditioned, refurbished, repaired or remanufactured products or parts in the warranty repair or replacement process. Such products and parts will be comparable in function and performance to an original product or part, as determined by Seller in its sole discretion, and warranted for the remainder of the original warranty period.

In order to make a warranty claim, you must notify Seller in writing within sixty (60) days after your discovery of the defect, provide proof of purchase such as the invoice and comply with Seller's other warranty requirements. Upon receiving that notice, Seller may require you to promptly return the Product to Seller, or its authorized service provider, freight prepaid. Your warranty claim should be addressed to MaxLite, Inc., 12 York Ave. West Caldwell NJ 07006.

This limited warranty only applies to specified LED fixtures. Backup batteries, photocells, mounting accessories and other fixture accessories can be found at www.MaxLite.com/lighting/products/warranty.

THE FOREGOING WARRANTY PROVISIONS ARE EXCLUSIVE AND ARE GIVEN AND ACCEPTED IN LIEU OF ANY AND ALL OTHER WARRANTIES, WHETHER EXPRESS OR IMPLIED, INCLUDING WITHOUT LIMITATION ANY WARRANTY AGAINST INFRINGEMENT AND ANY IMPLIED WARRANTIES OF MERCHANT ABILITY OR FITNESS FOR A PARTICULAR PURPOSE.

IN NO EVENT SHALL SELLER BE LIABLE FOR INCIDENTAL, COMPENSATORY, CONSEQUENTIAL, INDIRECT, SPECIAL OR OTHER DAMAGES. SELLER'S AGGREGATE LIABILITY WITH RESPECT TO A DEFECTIVE PRODUCT SHALL IN ANY EVENT BE LIMITED TO THE MONIES PAID TO SELLER FOR THAT DEFECTIVE PRODUCT.

This warranty is effective for purchases of Product on or after the effective date set forth below. Seller reserves the right to modify this warranty from time to time. Any modification of this warranty shall be effective for all orders placed with Seller on or after the effective date of such revised warranty.

Effective Date: May 12, 2014