LED
TROFFERS

FEATURES

- USA approved LM-80 SMD
- UL DLC LM79 certified
- Input Voltage: 120-277 VAC 50/60Hz
- THD:<20%(at 277V)
- High lumen output, high efficiency, energy saving up to 60%
- Standard Warranty: 5 Years
- Standard Lifetime: Designed to L70 minimum 36,000 hours

50% ENERGY EFFICIENCY & LONG LIFE

60% MORE ENERGY EFFICIENT THAN STANDARD HID LAMPS

TYPICAL PAYBACK OF 1 - 3 YEARS

SKU #	Kelvin	Lumens	Size	Wattage	Voltage	DLC?	Mounting	Life Hours	Warranty
PLT-10537	**4000**	**4000**	**2X4**	**40**	**120-277**	**YES**	**CEILING**	**36000**	**5 years**

ADDITIONAL PHOTOS

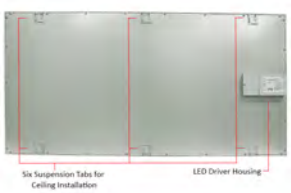

LED
TROFFERS

PL&T

FEATURES

- Opaque Lens
- Lightweight design
- LED driver included

TYPICAL APPLICATIONS

- Hotels, Schools, Factories
- Office, Hospitals

WARRANTY

Warranty	5 Years

SPECIFICATIONS

Dimmable	Yes
DLC Listed	Yes
Safety Rating	UL
CRI	80
Color	Cool White
Color Temperature	4000 Kelvin
Life Hours	36,000
Wattage	52 Watt
Lumens	4000
Voltage	120/208/240/277
Finish	White
Housing	N/A
Mounting	Ceiling Grid Mount/Suspended
Lens	A12 Clear Prismatic
Length	48 in.
Height	3.8 in.
Width	24 in.
Weight	14 lbs.
Warranty	5 Years

PHOTOMETRICS

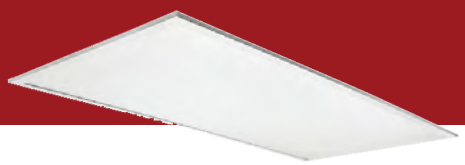

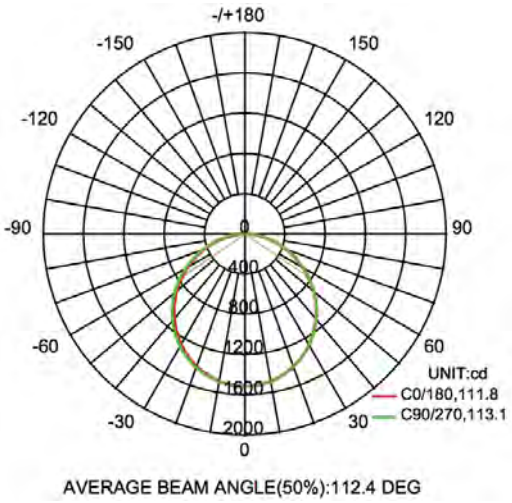

AVERAGE BEAM ANGLE(50%):112.4 DEG

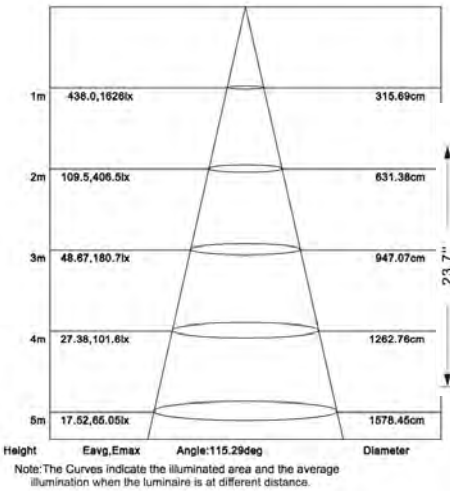
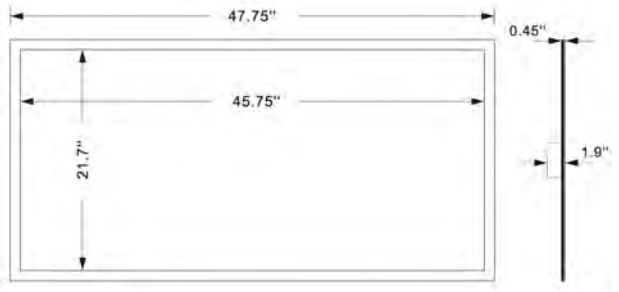
Note:The Curves indicate the illuminated area and the average illumination when the luminaire is at different distance.