369143m 1 09.18.13

Maestro Wireless® Dimmers and Switches

The Maestro Wireless® solution incorporates Maestro Wireless® load controls, wireless sensors, and wireless remote controls, which provide a system that delivers energy savings, convenience, and ease of installation.

Maestro Wireless® dimmers and switches use Lutron® patented Clear Connect® RF Technology, which enables wireless communication with Radio Powr Savr™ sensors and Pico® wireless controls for light control and general switched loads.

Features

- The Maestro Wireless® solution provides dimming/switching of multiple load types, occupancy/vacancy sensing, daylight harvesting, and high-end trim.
- Lutron® patented Clear Connect® RF Technology works through walls and floors.
- Incorporates advanced features such as fade ON/fade OFF, high-end trim, and rapid full-ON.
- Controls include Front Accessible Service Switch (FASS™) for safe lamp replacement.
- Two-wire dimmers and switches available for retrofit applications.
- Power failure memory: If power is interrupted, the control will return to its previously set level prior to interruption.

Receiving Devices
Maestro Wireless® Controls

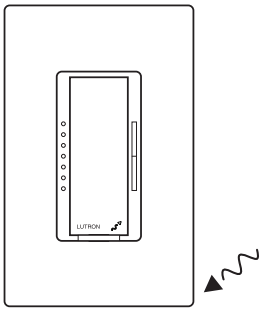

Neutral and Non-Neutral Dimmers

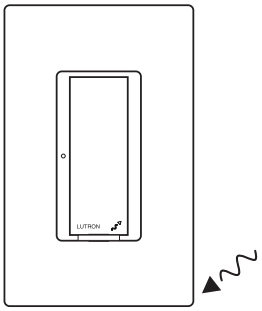

Neutral and Non-Neutral Switches

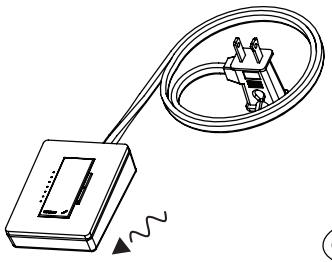

Lamp Dimmers

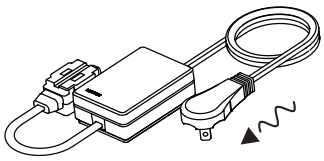

Plug-In Modules

Transmitting Devices
Radio Powr Savr™ Sensors

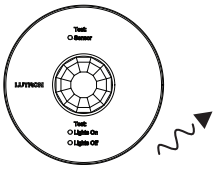

Ceiling-Mounted Occupancy and Vacancy Sensors

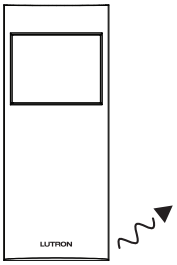

Wall-Mounted Occupancy and Vacancy Sensors

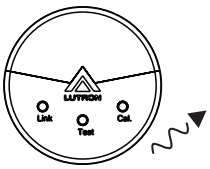

Daylight Modules

Pico® Wireless Controls

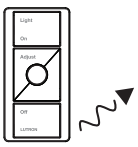

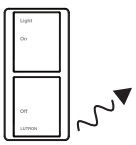

Job Name:	Model Numbers:
Job Number:	

Maestro Wireless® Dimmers

Models Available

Dimmers

CFL/LED/Halogen / Incandescent / Magnetic Low-Voltage

MRF2-6CL-XX	150 W CFL/LED Dimmer; 600 W Incandescent/Halogen 120 V~
MRF2-6MLV-XX	600 W / 600 VA Incandescent/MLV Dimmer 120 V~
MRF2-6ND-120-XX*	600 W / 600 VA Spec-Grade Neutral wire Dimmer 120 V~
MRF2-10D-120-XX	1000 W / 1000 VA Spec-Grade Dimmer 120 V~

3-Wire Fluorescent

MRF2-F6AN-DV-XX*	6 A 3-wire Fluorescent Spec-Grade Neutral-Wire Dimmer 120–277 V~

Electronic Low-Voltage Dimmer

MRF2-6ELV-120-XX*	600 W ELV Dimmer 120 V~

* Neutral wire required

Dimmer

Companion Dimmers

Claro® Gloss Finishes

MA-R-XX	Companion Dimmer 120 V~
MA-R-277-XX	Companion Dimmer 277 V~

Satin Colors® Satin Finishes

MSC-AD-XX	Companion Dimmer 120 V~
MSC-AD-277-XX	Companion Dimmer 277 V~

"XX" in the model number represents color/finish code.

Companion Dimmer

Job Name:	Model Numbers:
Job Number:	

Ganging and Derating

When combining controls in the same wallbox, derating is required (see Load Type and Capacity tables). Only MRF2-8ANS controls have fins that need to be removed for multigang installations. No other controls have fins, but they must still be derated in multigang installations.

Dimmer Load Type and Capacity

Neutral Required

Do not remove outside fins on ends of ganged controls (shaded areas below)

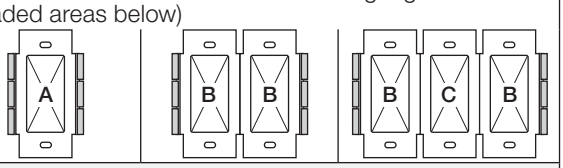

Control	Voltage	Load Type	Minimum Load	Maximum Load		
				A: Not Ganged	B: End of Gang	C: Middle of Gang
MRF2-6ND-120[1,2,3]	120 V~	Incandescent	25 W	600 W	500 W	400 W
		MLV[2]	25 W/VA	450 W/600 VA	400 W/500 VA	300 W/400 VA
MRF2-6ELV[1,2]	120 V~	ELV[2]	5 W	600 W	500 W	400 W
MRF2-F6AN-DV[1,4]	120–277 V~	Lighting	1 ballast 0.05 A	6 A	5 A	3 A

No Neutral Required

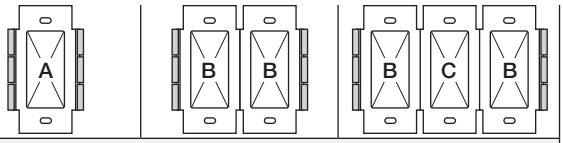

Control	Voltage	Load Type	Minimum Load	Maximum Load		
				A: Not Ganged	B: End of Gang	C: Middle of Gang
MRF2-6CL[1]	120 V~	Incandescent, CLF/LED	50 W (see lamp list)	See *Mixing Lamp Types*, page 4		
MRF2-6MLV[1,2,4]	120 V~	MLV[2]	50 VA	450 W/600 VA	400 W/500 VA	300 W/400 VA
MRF2-10D-120[1,2,4]	120 V~	Incandescent	50 W	1000 W	800 W	650 W
		MLV[2]	50 W/VA	800 W/1000 VA	600 W/800 VA	500 W/650 VA

1 Dimmer Load Type:
- MRF2-6ND-120, MRF2-6MLV, and MRF2-10D-120 are designed for use with permanently-installed incandescent, magnetic low-voltage, or tungsten halogen only.
- MRF2-6ELV is designed for use with permanently-installed electronic low-voltage only. Do not install dimmers to control receptacles or motor-operated appliances.
- MRF2-F6AN-DV is designed for use with permanently installed 3-wire line voltage control fluorescent ballasts or LED drivers only (Hi-lume®, Hi-lume Compact SE™, Eco-10®, and EcoSystem®).
- MRF2-6CL is designed for use with permanently-installed incandescent, CFL, LED, or tungsten halogen only.

2 Low-Voltage Applications:
- Use MRF2-6ND-120, MRF2-6MLV, and MRF2-10D-120 with magnetic (core and coil) low-voltage transformers only. Not for use with electronic (solid-state) low-voltage transformers.
- Use MRF2-6ELV with electronic (solid-state) low-voltage transformers only. Operation of a low-voltage circuit with lamps inoperative or removed may result in transformer overheating and premature failure. Lutron strongly recommends the following:
  - Do not operate low-voltage circuits without operative lamps in place.
  - Replace burned-out lamps as quickly as possible.
  - Use transformers that incorporate thermal protection or fused transformer primary windings to prevent transformer failure due to overcurrent.

3 Can control the following power booster/load interface: Hi-Power 2•4•6™ Boosters (HP-2, HP-4, HP-6) for control of most popular lighting sources including Lutron® 3-wire line-voltage control fluorescent dimming ballasts (Hi-lume®, Hi-lume Compact SE™, Eco-10®, and EcoSystem®).

4 Can control the following power boosters/load interfaces: Phase-adaptive Power Modules (PHPM-WBX-DV-WH), 3-wire Fluorescent Power Modules (PHPM-3F-DV-WH), Tu-Wire® Fluorescent Power Modules (PHPM-PA-DV-WH), and 0–10 V (GRX-TVI).

Job Name:	Model Numbers:
Job Number:	

Dimmer Load Type and Capacity (continued)

Mixing Lamp Types

Mixing lamp types (using a combination of CFL/LED, and Incandescent/Halogen bulbs) and ganging with other dimmers or electronic switches may reduce maximum wattage, as shown. Example: If fins from one side of dimmer are removed and you have two 24 W bulbs installed (total CFL Wattage = 48 W), you may add up to 300 W of incandescent or halogen lighting.

Do not remove outside fins on ends of ganged controls (shaded areas below)

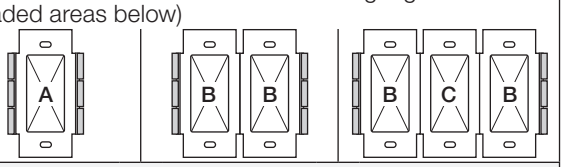

Total CFL/LED Wattage		Total Incandescent/Halogen Wattage				
		A: Not Ganged		B: End of Gang		C: Middle of Gang
MRF2-6CL						
0 W	+	50 W–600 W	Or	50 W–500 W	Or	50 W–400 W
1 W–25 W	+	0 W–500 W	Or	0 W–400 W	Or	0 W–300 W
26 W–50 W	+	0 W–400 W	Or	0 W–300 W	Or	0 W–200 W
51 W–75 W	+	0 W–300 W	Or	0 W–200 W	Or	0 W–100 W
76 W–100 W	+	0 W–200 W	Or	0 W–100 W	Or	0 W–50 W
101 W–125 W	+	0 W–100 W	Or	0 W–50 W	Or	0 W
126 W–150 W	+	0 W	Or	0 W	Or	0 W

Job Name:	Model Numbers:
Job Number:	

Specifications

Regulatory Approvals

- UL Listed.
- cUL Listed (MRF2-6CL only).
- CSA Certified (except for MRF2-6CL).
- FCC Approved. Complies with the limits for a Class B digital device, pursuant to Part 15 of the FCC Rules.
- Industry Canada Certified.

Power

Operating voltage:

- 120 V~ 50/60 Hz (all models)
- 277 V~ 50/60 Hz (MRF2-6ANS-277, MRF2-8S-DV, MRF2-F6AN-DV)

Key Design Features

Dimmers

- On a single-tap, lights fade UP or DOWN.
- On a double-tap, lights go to full ON.
- When ON, press and hold to engage 20-second fade to OFF.
- Light levels can be fine-tuned by pressing and holding the dimming rocker until the desired light level is reached.
- Two-wire dimmers available.

Switches

- On a single-tap, lights turn ON or OFF.
- Two-wire switches available.

All RF Local Controls

- Tested to withstand electrostatic discharge without damage or memory loss, in accordance with IEC 61000-4-2.
- Tested to withstand surge voltages without damage or loss of operation, in accordance with IEEE C62.41-1991 Recommended Practice on Surge Voltages in Low-Voltage AC Power Circuits.
- Controls always operate locally and do not require system control.
- Power failure memory: should power be interrupted, the control will return to its previously-set level prior to the interruption when power is restored.
- Uses conventional 3-way and 4-way wiring.
- Multiple location control from Dimmer/Switch and up to nine Companion Dimmers/Switches.
- Use Lutron® Designer (Claro® and Satin Colors®) wallplates or designer-style wallplates from other manufacturers. Wallplates are sold separately.
- Lutron Claro® and Satin Colors® wallplates snap on with no visible means of attachment.
- Requires a one-gang U.S. wallbox; 3½ in (89 mm) deep recommended, 2¼ in (57 mm) deep minimum.
- Green indicator lights.

System Communications and Capacity

- Maestro Wireless® controls communicate with the Pico® wireless controls and Radio Power Savr™ sensors through radio frequency (RF).
- Maestro Wireless® local controls must be located within 60 ft (18 m) line-of-sight or 30 ft (9 m) through walls, of Radio Power Savr™ sensors.
- Maestro Wireless® local controls must be located within 100 ft (30 m) line-of-sight or 30 ft (9 m) through walls, of a Pico® wireless control.
- Up to ten Maestro Wireless® controls can be configured to work together.

Environment

- Ambient operating temperature: 32 °F to 104 °F (0 °C to 40 °C), 0%–90% humidity, non-condensing. Indoor use only.

Job Name:	Model Numbers:
Job Number:	

Dimensions

All dimensions are shown as: in (mm)

Front View

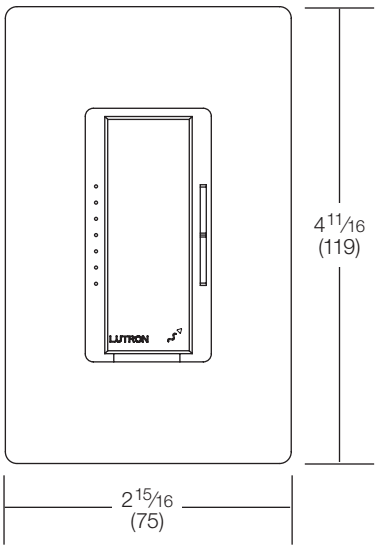

Side View

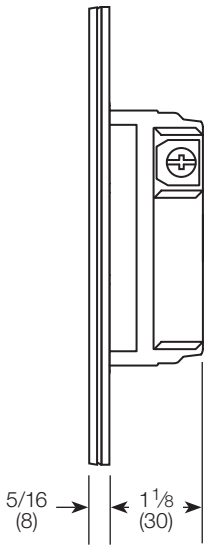

Mounting

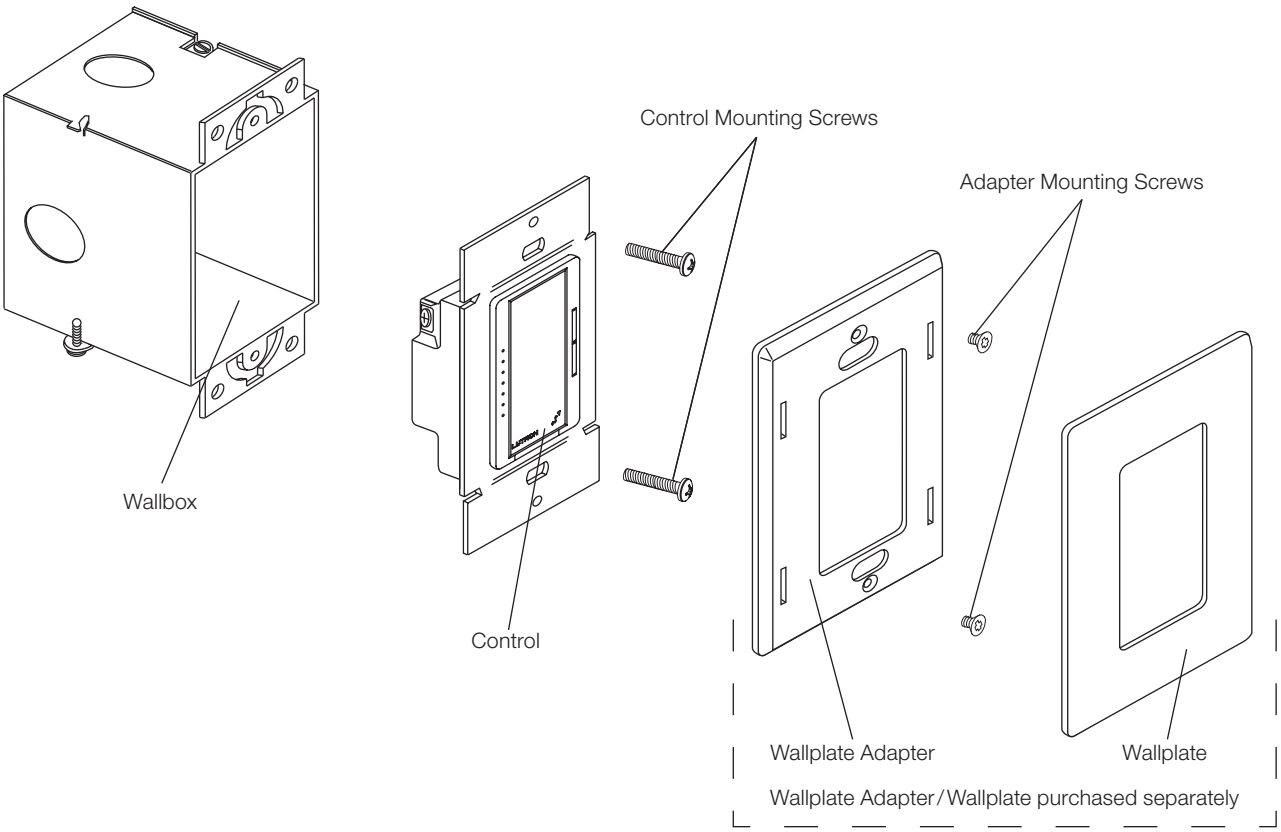

Job Name:	Model Numbers:
Job Number:	

Operation

Dimmer

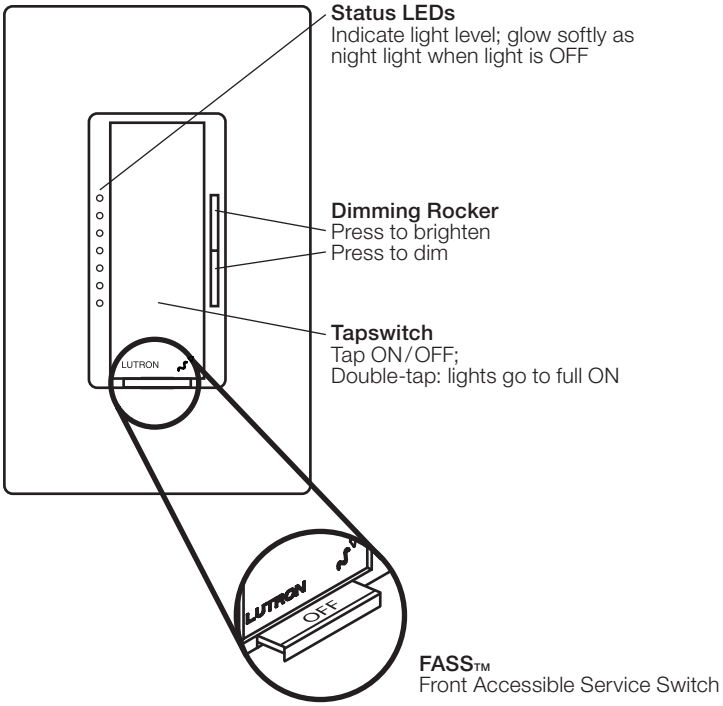

Switch

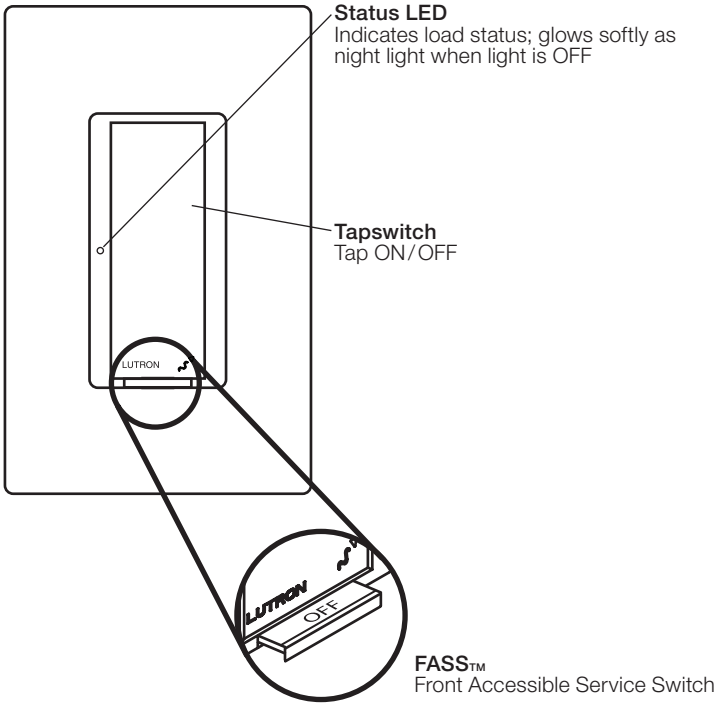

FASS™ Front Accessible Service Switch

Important Notice: To service load, remove power by pulling the FASS™ switch out completely on either the Dimmer/Switch or Companion Dimmer/Switch. After servicing load, push the FASS™ switch back in fully to restore power to the control.

Job Name:	Model Numbers:
Job Number:	

Wiring Diagrams

Single-Location Dimmer Installation without Neutral
MRF2-6CL, -6MLV, -10D-120

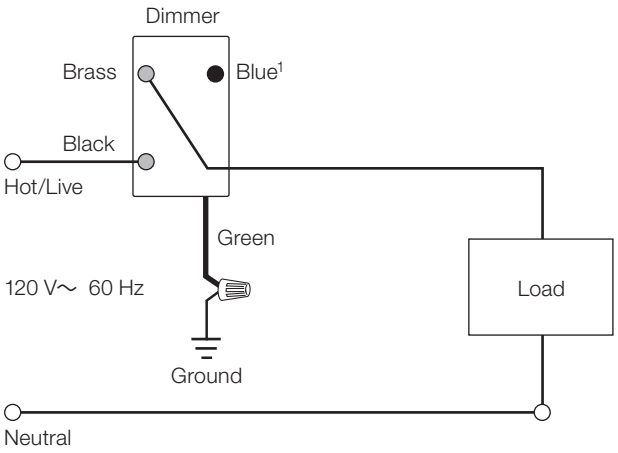

Multi-Location Dimmer Installation without Neutral[2]
MRF2-6CL, -6MLV, -10D-120 with MA-R/MSC-AD

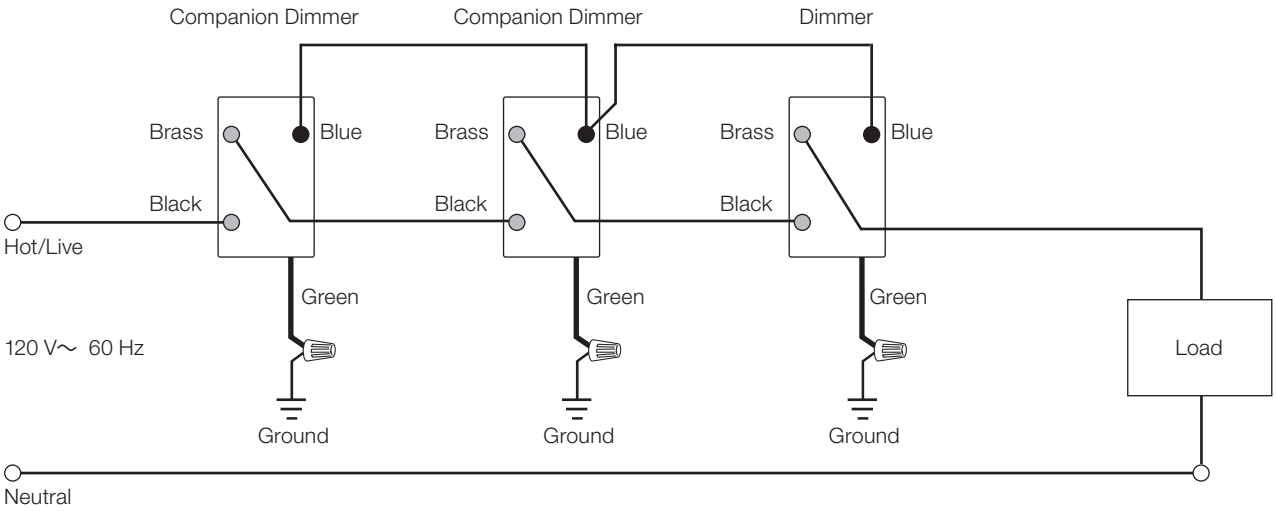

1 When using controls in single location installations, tighten the blue terminal without any wires attached. Do not connect the blue terminal to any other wiring or to ground.

2 Up to nine Maestro® Companion Dimmers may be connected to the Maestro Wireless® Dimmer. Total blue terminal wire length may be up to 250 ft (76 m).

Job Name:	Model Numbers:
Job Number:	

Colors and Finishes

Gloss Finishes

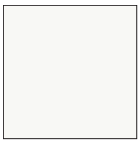
White
WH

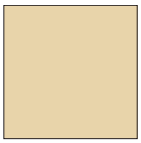
Ivory
IV

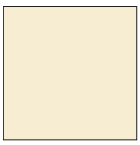
Almond
AL

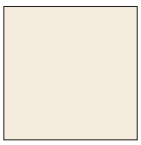
Light Almond
LA

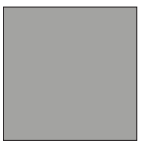
Gray
GR

Brown
BR

Black
BL

Satin Finishes

Hot
HT

Merlot
MR

Plum
PL

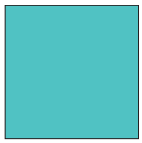
Turquoise
TQ

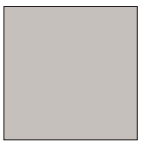
Taupe
TP

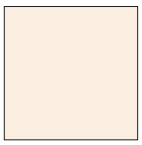
Eggshell
ES

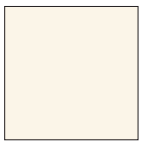
Biscuit
BI

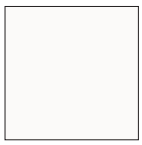
Snow
SW

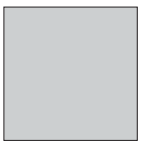
Palladium
PD

Midnight
MN

Sienna
SI

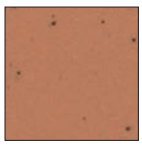
Terracotta
TC

Greenbriar
GB

Bluestone
BG

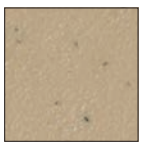
Mocha Stone
MS

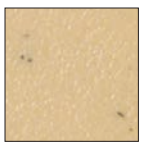
Goldstone
GS

Desert Stone
DS

Stone
ST

Limestone
LS

- Due to printing limitations, colors and finishes shown cannot be guaranteed to perfectly match actual product colors.
- Color chip keychains are available for more precise color matching:
  Gloss Finishes: DG-CK-1
  Satin Finishes: SC-CK-1

Metal Finish (wallplate only)

Stainless Steel
SS

When using Stainless Steel wallplates, it is recommended that you order the keypad in Midnight (MN).

Job Name:	Model Numbers:
Job Number:	