LED Low Bay

High efficiency LED Low Bays. Use anywhere you need exceptional light distribution for mounting heights up to 40 feet.

Limitless options for the following applications:

- Warehouses
- Commercial Facilities
- Manufacturing Facilities
- Aisles (Open and Stack)

Great features and benefits:

- Energy-efficient drivers
- Instant on
- Long life: 50,000 hours
- Replaces traditional metal halide and linear fluorescent low bay systems
- Excellent color rendering
- Heavy duty 20 gauge housing is code grade steel

LED Low Bay with Prismatic Wraparound Lens

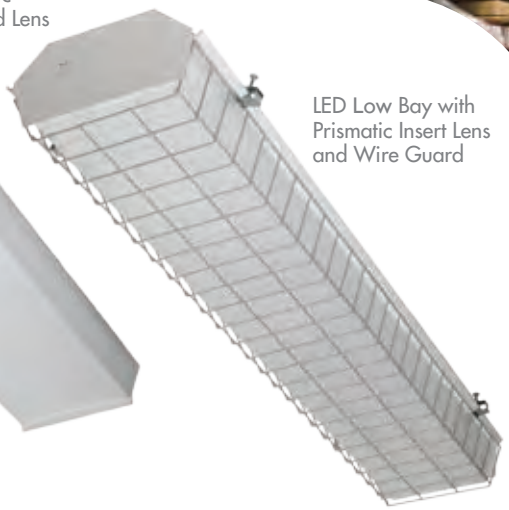

LED Low Bay with Prismatic Insert Lens and Wire Guard

c UL us LISTED

TCP®
325 Campus Dr. | Aurora, Ohio 44202 | P: 800-324-1496 | tcpi.com
©TCP MAY 2014/52768

LED Low Bay

LED	50,000 Hours average rated life, 120-277 Volts

Applications:

Ideal for mounting heights from 20 feet to 40 feet.

- Warehouses
- Commercial Facilities
- Manufacturing Facilities
- Aisles (Open and Stack)

Replacement Comparison

TYPE	WATTS	ENERGY SAVINGS (%)
TCP LED Low Bay	130W	
400W Metal Halide	458W	72%
6 Lamp T8 HBF 4	220W	41%
Lamp T5HO	249W	48%

Features	Benefits
Up to 72% less energy than HID alternatives	Instant energy savings.
Long life	Minimizes replacement and maintenance costs.
Very low heat generation	Less energy wasted as heat.
Excellent Color Consistency and CRI	Enhances colors of focal point while maintaining uniformity throughout lighting installation.
UL approved for damp location	Can be used outdoors when protected from elements. Withstands humidity indoors/outdoors.

Specifications

Input Line Voltage:	120 - 277 VAC
Input Power	129.5W
Input Line Frequency	50/60HZ
Lamp Life (Rated)	50,000 hrs
Minimum Starting Temp	-30ºC
Maximum Operating Temp	40ºC
CRI	82

LED Low Bay

Optional Prismatic Wraparound Lens (not for use with Wire Guard)

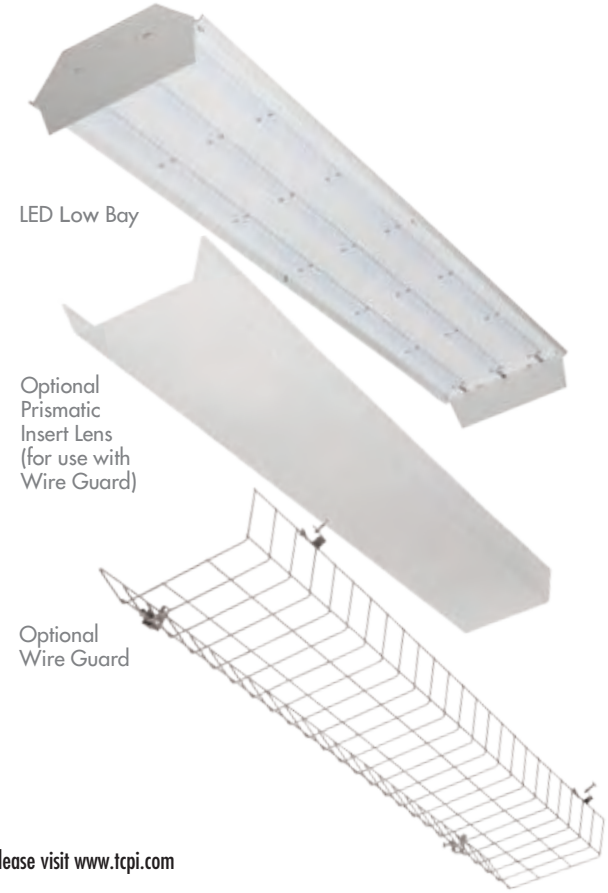

LED Low Bay

Optional Prismatic Insert Lens (for use with Wire Guard)

Optional Wire Guard

c UL us

5 YEAR WARRANTY

For the most up-to-date specs and warranty information, please visit www.tcpi.com

TCP®
325 Campus Dr. | Aurora, Ohio 44202 | P: 800-324-1496 | tcpi.com

©TCP MAY 2014/52768

LED Low Bay

Catalog Number	
Notes	Type

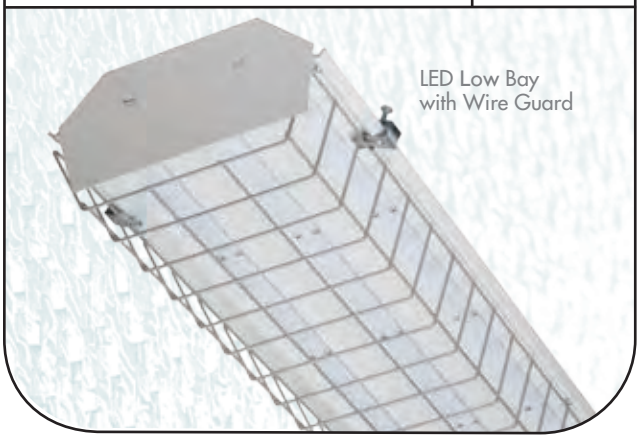

LED Low Bay

Installation
Suspension by chain, cable, hook or monopoint with appropriate accessories.

Warranty
Five year warranty against defects in manufacturing.

Listing
UL/cUL Listed - Suitable for damp locations.

Application

The LED Low Bay's superior lumen package is ideal for replacing traditional metal halide and linear fluorescent low bay systems. Benefits include high efficiency, excellent color rendering, long life, instant on, and improved uniformity. Suggested mounting heights from 20'–40' with primary applications including warehousing, commercial facilities, manufacturing facilities, open and stack aisle applications.

Description

The full body assembly features TCP high efficiency drivers and high output LEDs. The LED Low Bay's heavy duty 20 gauge housing and 8 gauge wireguard is code gauge steel and all components, excluding the wireguard, are post painted with a glossy, high reflectance white paint.

Electrical

All drivers are class 2 rated and UL/cUL listed. Our drivers are tightly secured by mounting bolts.

Finish

The baked white enamel finish is electrostatically applied and post painted with a glossy, highly reflective and durable white paint.

Catalog Ordering Matrix

Brand	Family	Voltage and Controls	Lumen Package	Color Temperature	Options
TCP	HB4 - 4' LED Low Bay	UNI - 120V-277V	12 - 12,000 Lumens	41K - 4100K 50K - 5000K	(See Below)

OPTIONS (Add to catalog number in order shown)

❶ **Power Cords**
- **6C** - 6' PCord 300V 16/3 SJTOOW NO PLUG
- **6C4** - 6' PCord 300V 18/4 SJTOW NO PLUG
- **6W** - 6' WHIP PCord 600V 16/3 NO PLUG
- **2P** - 8' PCord 125V 15A 16/3 SJTOOW NEMA 5-15P
- **3P** - 8' PCord 125V 15A 16/3 SJTOW NEMA L5-15P
- **8T** - 8' PCord 480V 20A 16/3 SEOW NEMA L8-20P
- **9T** - 8' PCord 250V 20A 16/3 SJTOW NEMA L6-20P
- **4T** - 10' PCord 125V 20A 16/3 SJTOW NEMA L5-20P
- **10T** - 10' PCord 277V 15A 14/3 SJTOW NEMA L7-15P
- **10T2** - 10' PCord 277V 20A 14/3 SJTOW NEMA L7-20P
- **10C** - 10' PCord 277V SJTOOW NO PLUG
- **10C6** - 10' PCord 600V 15A 16/3 STOW NO PLUG
- **20C** - 20' PCord 277V 20A 16/3 SJTOOW NO PLUG
- **20C4** - 20' PCord 300V 18/4 SJTOW NO PLUG

❷ **Occupancy Sensors**
- **TS1** - TCP Occupancy Sensor w/bracket and interchangeable lenses, 40' or less, 120V, 277V, or 347V.
- **TS1C** - TCP Cold Storage Occupancy Sensor w/bracket and interchangeable lenses, 40' or less, 120V, 277V, or 347V.
- **TS4** - TCP Occupancy Sensor w/bracket and interchangeable lenses, 40' or less, 480V.
- **TS4C** - TCP Cold Storage Occupancy Sensor w/bracket and interchangeable lenses, 40' or less, 480V.

❸ **Wire Guard / Lens**
- **WG** - Wire Guard
- **PIL** - Prismatic Insert Lens, to be used with Wire Guard
- **PWL** - Prismatic Wrap Lens, not to be used with Wire Guard

❹ **Special Mounting**
- **HCB** - Hub Connector Box - 3/4" Threaded Hub Mount

❺ **Special Packaging**
- **SP** - Single Packed

AVAILABLE HANGING KITS (ordered separately)
- **EZHANGER** - 15' adjustable aircraft cable hanging kit

TCP®
325 Campus Dr. | Aurora, Ohio 44202 | P: 800-324-1496 | tcpi.com
©TCP MAY 2014/52768

LED Low Bay

Dimensions & Construction

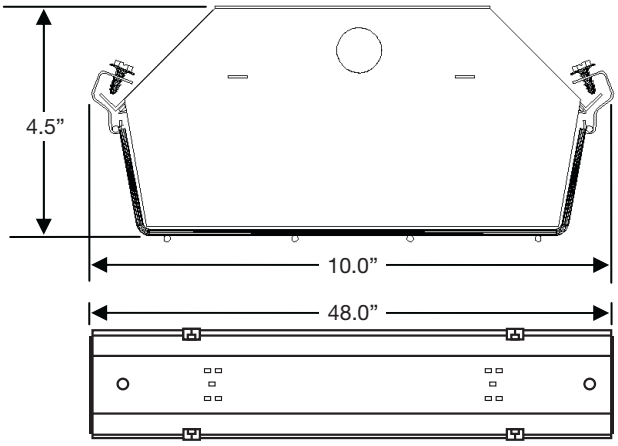

All cold rolled steel parts are post painted with a glossy, highly reflective and durable white paint

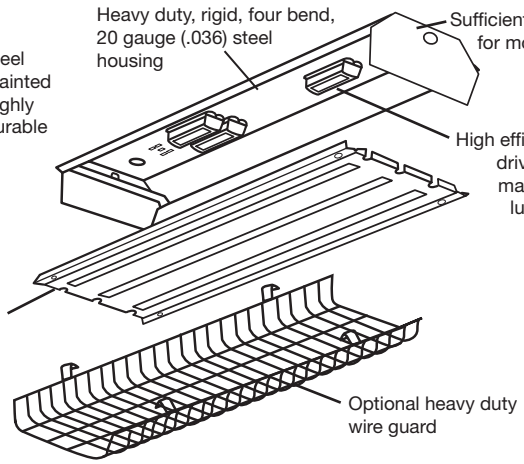

Photometric Report

TCP LED Low Bay with Prismatic Wraparound Lens

LED Low Bay Luminaire with lumen rating of 12000 lumens and three high efficiency drivers operating at 120-277 VAC and 129.6 watts.

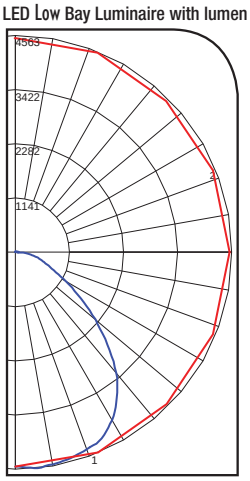

Photometric Report

Efficiency (total)	N.A.
Spacing Criterion (0-180)	1.16
Spacing Criterion (90-270)	1.34

Average Luminance (Candelas / Square Meter)

Angle In Degrees	*Average 0-Deg*	*Average 45-Deg*	*Average 90-Deg*
45	10168	9832	11289
55	8882	8639	8686
65	8493	7322	5896
75	8564	8173	5416
85	4690	5933	5973

Zonal Lumen Summary

Zone	*Lumens*	*% Lamp*	*% Fixture*
0-30	3488.83	N.A.	29.40
0-40	5640.92	N.A.	47.50
0-60	9302.33	N.A.	78.40
0-90	11385.23	N.A.	96.00
90-120	365.12	N.A.	3.10
90-130	419.07	N.A.	3.50
90-150	468.40	N.A.	3.90
90-180	479.22	N.A.	4.00
0-180	11864.45	N.A.	100.00

Total Luminaire Efficiency = N.A.%

Maximum Candela = 4563.15
Located At Horizontal Angle = 292.5,
Vertical Angle = 7

1 - Vertical Plane Through Horizontal Angles (292.5 - 112.5) (Through Max. Cd.)

2 - Horizontal Cone Through Vertical Angle (7) (Through Max. Cd.)

Coefficient of Utilization Table

Effective Floor Cavity Reflectance = 20%

RC	80				70				50			30			10			0
RW	70	50	30	10	70	50	30	10	50	30	10	50	30	10	50	30	10	0
0	118	118	118	118	115	115	115	115	109	109	109	103	103	103	98	98	98	96
1	108	104	99	96	105	101	97	94	96	93	90	91	89	87	87	85	83	81
2	99	91	84	79	96	89	83	78	85	80	75	81	77	73	77	74	71	68
3	90	80	73	66	88	78	71	65	75	69	64	72	67	62	69	64	61	58
4	83	72	63	57	81	70	62	56	67	60	55	64	58	54	62	57	53	50
5	77	64	56	49	74	63	55	49	60	53	48	58	52	47	56	50	46	44
6	71	58	49	43	69	57	49	43	55	48	42	53	46	42	51	45	41	39
7	66	53	44	38	64	52	44	38	50	43	38	48	42	37	47	41	36	34
8	61	48	40	34	60	47	40	34	46	39	34	44	38	33	43	37	33	31
9	57	44	36	31	56	44	36	31	42	35	30	41	35	30	40	34	30	28
10	54	41	33	28	52	40	33	28	39	32	28	38	32	27	37	31	27	25

Photometric Report

TCP LED Low Bay

LED Low Bay Luminaire with lumen rating of 12000 lumens and three high efficiency drivers operating at 120-277 VAC and 129.5 watts.

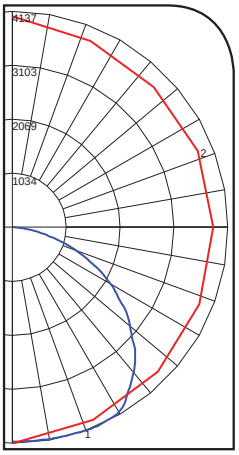

Photometric Report

Efficiency (total)	N.A.
Spacing Criterion (0-180)	1.30
Spacing Criterion (90-270)	1.40

Average Luminance (Candelas / Square Meter)

Angle In Degrees	*Average 0-Deg*	*Average 45-Deg*	*Average 90-Deg*
45	10958	11547	12656
55	10780	11473	12208
65	10204	11062	11268
75	8743	9601	8934
85	75	603	3527

Zonal Lumen Summary

Zone	*Lumens*	*% Lamp*	*% Fixture*
0-30	3301.98	N.A.	25.80
0-40	5524.45	N.A.	43.20
0-60	10110.37	N.A.	79.10
0-90	12739.09	N.A.	99.70
90-120	19.84	N.A.	0.20
90-130	24.07	N.A.	0.20
90-150	31.46	N.A.	0.20
90-180	35.88	N.A.	0.30
0-180	12774.97	N.A.	100.00

Total Luminaire Efficiency = N.A.%

Maximum Candela = 4137.26
Located At Horizontal Angle = 270,
Vertical Angle = 21

1 - Vertical Plane Through Horizontal Angles (270 - 90) (Through Max. Cd.)

2 - Horizontal Cone Through Vertical Angle (21) (Through Max. Cd.)

Coefficient of Utilization Table

Effective Floor Cavity Reflectance = 20%

RC	80				70				50			30			10			0
RW	70	50	30	10	70	50	30	10	50	30	10	50	30	10	50	30	10	0
0	119	119	119	119	116	116	116	116	111	111	111	106	106	106	102	102	102	100
1	109	104	100	96	106	102	98	95	98	95	92	94	91	89	90	88	86	84
2	99	91	84	78	96	89	83	77	85	80	75	82	77	74	79	75	72	70
3	90	79	71	65	87	78	70	64	75	68	63	72	66	62	69	65	61	58
4	82	70	61	54	80	69	60	54	66	59	53	64	58	52	62	56	52	50
5	75	62	53	47	73	61	53	46	59	52	46	57	50	45	55	49	45	43
6	69	56	47	40	68	55	46	40	53	46	40	51	45	39	50	44	39	37
7	64	51	42	36	63	50	41	35	48	41	35	47	40	35	45	39	35	33
8	60	46	37	32	58	45	37	31	44	37	31	43	36	31	42	35	31	29
9	56	42	34	28	54	42	34	28	40	33	28	39	33	28	38	32	28	26
10	52	39	31	26	51	38	31	25	37	30	25	36	30	25	35	29	25	23

TCP®

325 Campus Dr. | Aurora, Ohio 44202 | P: 800-324-1496 | tcpi.com

©TCP MAY 2014/52768