DIVA®

Installation Instructions

Please Leave for Occupant

P/N 037-107

DVTV, DVSCTV
Low-Voltage Control

For use with: 0-10 Volt Lighting Control Devices

Dimming Control 10 V⎓ 30 mA
Switch 24 V⎓ 100 mA

Package Contents and Parts Identification (Figure A)

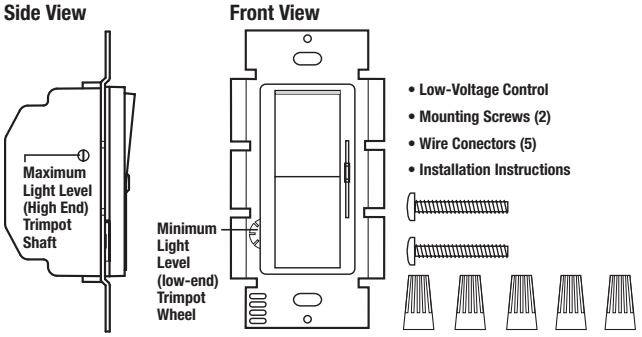

Operation

The 0-10 volt low-voltage lighting control provides dimming control for 0-10 volt compatible LED drivers, fluorescent ballast and HID ballast.

Minimum light level (low-end) shall be adjusted to optimize performance.

Important Notes
Please Read Before Installation

Wallbox Dimensions: A single-gang wallbox 3 in high x 2 in wide x 2 ½ in deep (76 mm high x 51 mm wide x 63.5 mm deep) will service all individual controls.

Wiring Note: Always turn off AC power before installation. Install in accordance with all local and national electrical codes.

Fluorescent Lamps: For the best dimming performance, new fluorescent lamps may need to be operated at full light output for a specified amount of time prior to dimming. Contact the lamp manufacturer for their specific recommendations concerning lamp seasoning.

Load Rating: A single low-voltage control can control up to 30 mA of current. Contact Ballast or Driver manufacturer for current source on control wires to determine maximum load.

Do not connect this control to line voltage.

Compatible Devices:
Works with all ballasts and drivers that provide a current source compliant to IEC 60929 Annex E.2.

Compatible Drivers / Ballasts Include the Following:

Advance Mark VII 0-10v Electronic Dimming Ballasts
Advance Xitanium® LED Drivers
Cree LED Lighting® LR24
ELB Electronics 0-10V T8 Ballasts
Metrolight Smart Electronic Ballasts for HID
Osram Sylvania OPTOTRONIC® OT DIM Dimming Ballasts
Osram Sylvania QUICKTRONIC® POWERSENSE®
Osram Sylvania QUICKTRONIC® HELIOS™ T5HO Dimming Ballasts
Universal Lighting Technologies SuperDim® Ballasts

Lutron® Eco-10® 10 volt option
For a current list of ballast models refer to the *Lutron* Ballasts Selection Guide.

Driver / Ballast Functionality Check: With power OFF, check new driver/ballast for functionality prior to installation of control by connecting the device's purple and gray wires together. Turn power ON. The lights should now be at minimum brightness. With power OFF, disconnect the wires. Turn power ON. The lights should now be at maximum brightness.

Multigang Installations

When installing more than one control in the same wallbox, it may be necessary to remove all inner side sections prior to wiring (see diagram). Using pliers, bend side section up and down until it breaks off. Repeat for each side section to be removed. A physical barrier (partition) must exist when ganging with line-voltage products.

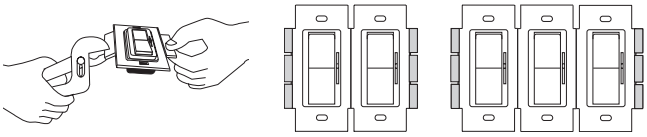

Installation

1. TURN POWER OFF to disable the 0-10 volt devices to be dimmed.
2. Strip wallbox wires to the following lengths:
   5/8 in (16 mm) for 16-20 AWG (1.0-0.50 mm²) wire.
   1/2 in (13 mm) for 10-14 AWG (6-1.5 mm²) wire.
   Use a wire connector to join one 14-18 AWG (1.5-0.75 mm²) supply wire with one or two 20 AWG (0.50 mm²) control wire(s).
3. Wire controls according to the appropriate wiring diagram shown in the "Wiring" section of this sheet and on the ballast.
4. Carefully push wires into wallbox allowing room for the control back cover.
5. Mount control into wallbox using screws provided. Units must be mounted vertically. (See Figure A).
6. Turn power ON. Pushing slider up should increase light intensity. Pushing slider down should decrease light output to approximately 10% of the maximum light level for 10% dimming ballasts.
7. The minimum light level (low-end) may be adjusted as follows:
   a. Push slider to the bottom-most position (minimum light intensity) and run lamps for 15 minutes to warm lamps.
   b. Locate minimum light level trimpot adjustment thumb wheel on the front of the unit (See Figure A).
   c. Turn the thumb wheel counterclockwise to decrease light level and clockwise to increase light level.
8. Attach Faceplate.

Troubleshooting

LIGHTS DO NOT OPERATE AT FULL BRIGHTNESS:

- Check to see that purple and gray wires are not cross connected in any fixture, conduit, or wallbox.
- Push slider up. Turn high-end trimpot counter-clockwise with a screwdriver to achieve maximum light intensity. The trimpot is initially set at the factory to the full counterclockwise position for maximum light intensity.

LIGHTS DO NOT DIM LOW ENOUGH:

- If the rated dimming range is not achieved, check to see that purple and gray wires are not cross connected in any fixtures.
- Push slider down. Turn the low-end trimpot thumb-wheel counter-clockwise to achieve minimum light intensity.

LIGHTS TURN OFF OR FLICKER AT LOW END:

- Push slider down. Turn the low-end trimpot thumb wheel clockwise until the lights remain on without flickering.

LUTRON®

Wiring

The total low-voltage wiring for this unit should not exceed 500 ft (152 m) with 20 AWG (0.50 mm^2) wire. For long low-voltage wiring runs, or where excessive electrical noise exists, shielded cable or conduit is required. A maximum load of 30 mA of current can be connected to the dimming wires (Purple, Gray) and a maximum load of 100 mA of current can be connected to the switch wires (Blue, Red, Red/White) of one control. Install in accordance with all local and national electrical codes.

NOTICE: LUTRON IS NOT LIABLE FOR DAMAGE DUE TO MISWIRING 0-10 VOLT CONTROL SIGNAL WIRES WITH LINE VOLTAGE.

> **WARNING:** SHOCK HAZARD. COULD RESULT IN SERIOUS INJURY OR DEATH. DO NOT RUN CLASS 2 WIRES AND LINE VOLTAGE CONDUCTORS TOGETHER IN THE SAME CONDUIT.

The low-voltage ballast control can be wired two ways: Dimming Only or ON/OFF and Dimming. Use the appropriate wiring diagram.

Wiring Without Relay

No Power Switching

Connect the control as shown in Figure B2. Changing the slider position will alter light intensity. Toggling the switch will switch between the preset slider value and the minimum light intensity of the ballast or driver. Note that on some ballasts and drivers this minimum light intensity will **not** be OFF.

Dimming Only Wiring

Power wiring not shown—see lighting device for wiring

Figure B1:

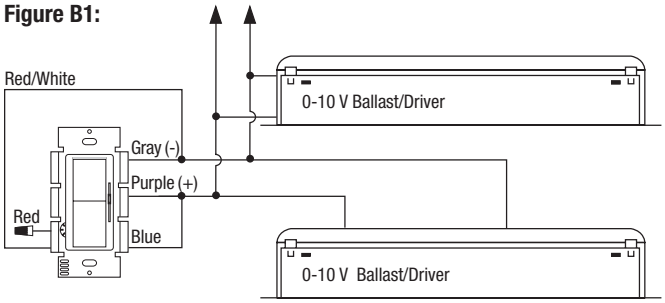

Dimming Only Wallbox Wiring

Figure B2:

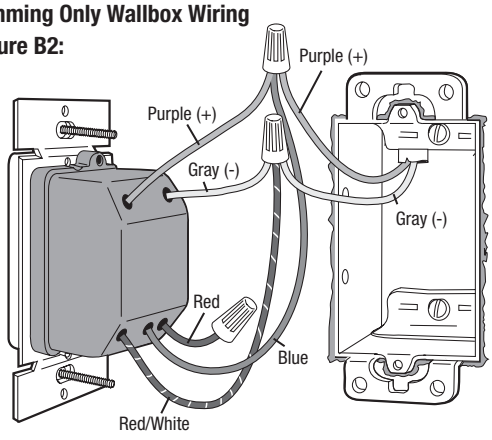

Note: Wire locations will vary. Reference wires by color not location

Dimming With ON/OFF Control Via Relay

Connect the control as shown in Figure C2. Do not install the Relay in the same wallbox as the low-voltage control. Refer to the wiring sheet included with the Relay for more information.

Dimming With ON/OFF Control Wiring Diagram Using Relay

Figure C1:

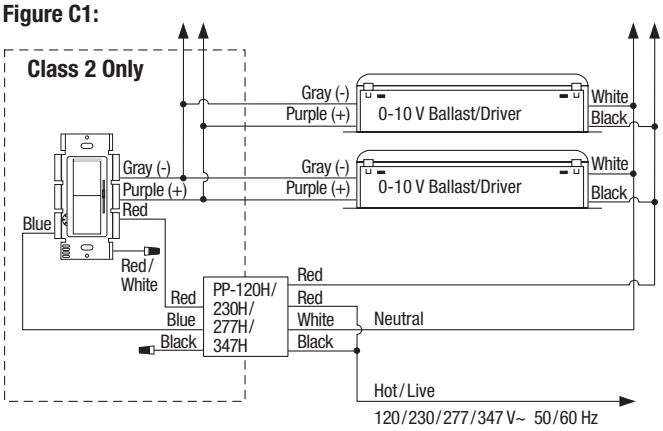

Dimming With ON/OFF Control Wallbox Wiring

Figure C2:

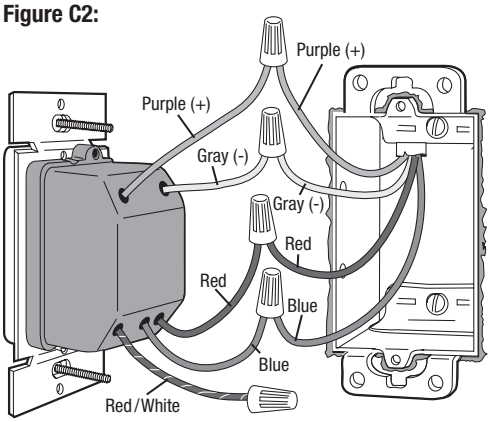

Note: Wire locations will vary. Reference wires by color not location.

LUTRON®