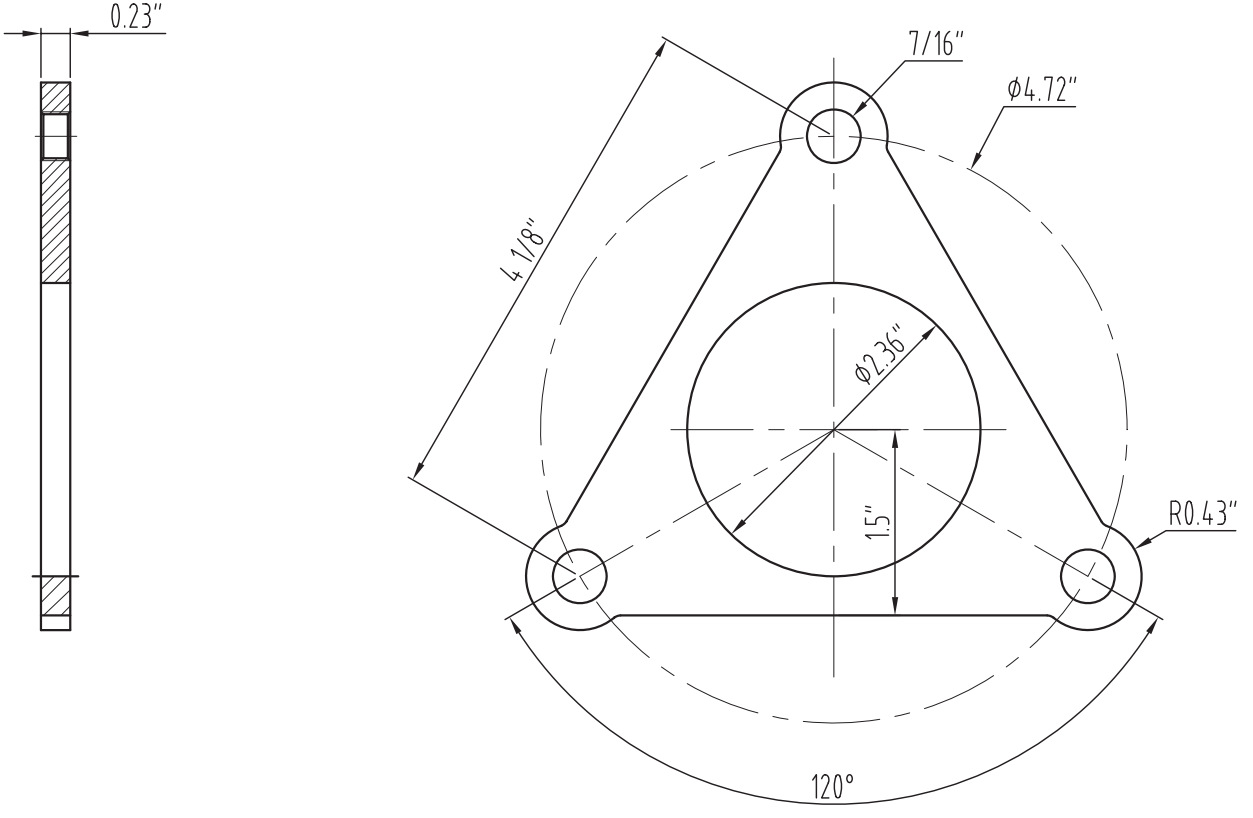
0.23"
7/16"
ϕ4.72"
4 1/8"
ϕ2.36"
1.5"
R0.43"
120°