# SORAA LED AR111
## 12.5W

GaN on GaN™ TECHNOLOGY

| | |
|---|---|
| OUTPUT RANGE: VIVID SERIES | 575-650 lumen; CRI-95, R9>90 |
| OUTPUT RANGE: BRILLIANT SERIES | 735-795 lumen; CRI-80 |
| BEAM ANGLE RANGE | 8°, 25°, 36°, 50° |
| COLOR TEMPERATURE RANGE | 2700K, 3000K, 4000K, 5000K |
| APPLICATION | Halogen replacement for indoor & outdoor applications |

12VAC

G53

DIM

IR

UV

Hg

### POINT SOURCE OPTICS
Exceptional beam control enables unique 8° narrow spot and smooth uniform beams

Single light source, single crisp shadow

### $VP_3$ VIVID COLOR AND $VP_3$ NATURAL WHITE
VIVID series provides accurate color rendering across the visible spectrum from 400nm to 700nm, CRI-95, R9>90

Accurate white rendering based on >70% excitation of Optical Brightening Agents with emission between 400nm & 440 nm

### ENERGY EFFICIENCY AND LONG LIFE
85% more energy efficient than standard halogen lamps

Typical payback of one year or less

Rated lifetime of 35,000 hours. Three year warranty

### CERTIFICATIONS
UL/CUL Class 2 and non-Class 2, FCC Title 47 Part 15B, RoHS, CE

### HIGHLY COMPATIBLE
Narrow spot compatible with Soraa SNAP System accessories

Thermally and geometrically compatible with standard fixtures

Suitable for fully enclosed fixtures per UL 1993. Can be used with front glass cover

Suitable for damp locations per UL

Works with trailing edge and leading edge phase cut dimmers, 12V AC magnetic and electronic transformers and 12V DC transformers (see www.soraa.com/resources)

### INTENDED USE AND APPLICATIONS
For use in AR111 compatible recessed downlights, track lighting and other indoor and outdoor applications

Soraa lamps are designed to safely turn down in any thermal environment not conducive to minimum airflow or proper ventilation

## GENERAL SPECIFICATIONS

| Form Factor | Operating Temperature | Electrical | |
|---|---|---|---|
| Width: 111mm (4.27”) | Minimum: -40°C (ambient) | Wattage: 12.5W | Dimmable to <20% |
| Height: 57mm (2.24”) | Typical: 60°C - 70°C (base) | Power factor: 0.92 | Flicker Index < 0.1 |
| Weight: 260g | Maximum: 80°C (base) | Voltage: 12V +/- 1.2V | Percent Flicker: 28% |

## COLOR RENDERING

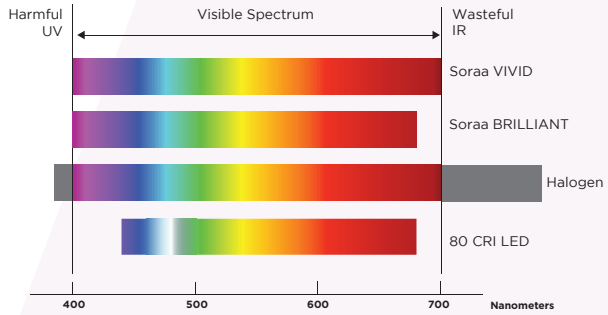


## DIMENSIONS

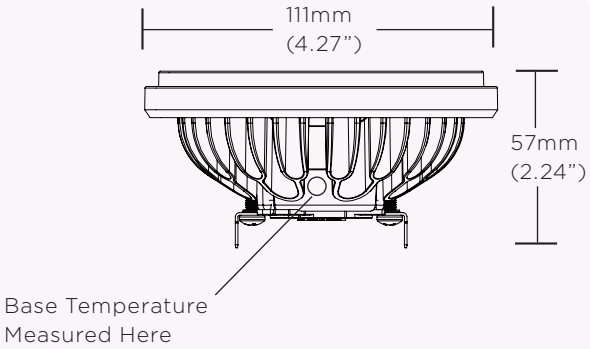


RoHS

**Soraa Inc.** 6500 Kaiser Drive, Suite 110, Fremont, CA 94555
855 GO-SORAA / 855 467-6722 www.soraa.com

# SORAA LED AR111 12.5W

## BEAM DIAGRAM

| Narrow Spot 8° | | | Narrow Flood 25° | | | Distance to Floor (Feet) | Flood 36° | | | Wide Flood 50° | | |
|---|---|---|---|---|---|---|---|---|---|---|---|---|
| Beam Dia at 50% CBCP (ft) | Field Dia at 10% CBCP (ft) | Foot-candles (% of CBCP) | Beam Dia at 50% CBCP (ft) | Field Dia at 10% CBCP (ft) | Foot-candles (% of CBCP) | | Beam Dia at 50% CBCP (ft) | Field Dia at 10% CBCP (ft) | Foot-candles (% of CBCP) | Beam Dia at 50% CBCP (ft) | Field Dia at 10% CBCP (ft) | Foot-candles (% of CBCP) |
| 0.4 | 0.7 | 11.1% | 1.3 | 2.2 | 11.1% | 3 | 1.9 | 3.5 | 11.1% | 2.8 | 5.0 | 11.1% |
| 0.8 | 1.5 | 2.8% | 2.7 | 4.4 | 2.8% | 6 | 3.9 | 6.9 | 2.8% | 5.6 | 10.1 | 2.8% |
| 1.3 | 2.2 | 1.2% | 4.0 | 6.6 | 1.2% | 9 | 5.8 | 10.4 | 1.2% | 8.4 | 15.1 | 1.2% |
| 1.7 | 2.9 | 0.7% | 5.3 | 8.7 | 0.7% | 12 | 7.8 | 13.9 | 0.7% | 11.2 | 20.1 | 0.7% |
| 2.1 | 3.7 | 0.4% | 6.7 | 10.9 | 0.4% | 15 | 9.7 | 17.3 | 0.4% | 14.0 | 25.2 | 0.4% |

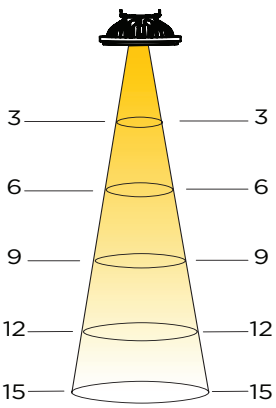


## SPECIFICATIONS BY MODEL NUMBER*

| Model Number | Product Code | CCT (K) | Beam Angle (°) | Field Angle (°) | CBCP (cd) | Halogen Equivalent** (Watts) | Total Flux (Lm) | Efficacy (Lm/W) | CRI/R9 | White Point (McA) |
|---|---|---|---|---|---|---|---|---|---|---|
| **SORAA VIVID SERIES** | | | | | | | | | | |
| SR111-12-08D-927-03SNAP | 01379 | 2700 | 8 | 14 | 15520 | 50 | 575 | 46 | 95 / 95 | 3 |
| SR111-12-25D-927-03 | 01381 | 2700 | 25 | 40 | 3100 | 50 | 575 | 46 | 95 / 95 | 3 |
| SR111-12-36D-927-03 | 01383 | 2700 | 36 | 60 | 1420 | 50 | 575 | 46 | 95 / 95 | 3 |
| SR111-12-50D-927-03 | 01385 | 2700 | 50 | 80 | 740 | 50 | 575 | 46 | 95 / 95 | 3 |
| SR111-12-08D-930-03SNAP | 01395 | 3000 | 8 | 14 | 16740 | 50 | 620 | 50 | 95 / 95 | 3 |
| SR111-12-25D-930-03 | 01397 | 3000 | 25 | 40 | 3340 | 50 | 620 | 50 | 95 / 95 | 3 |
| SR111-12-36D-930-03 | 01399 | 3000 | 36 | 60 | 1540 | 50 | 620 | 50 | 95 / 95 | 3 |
| SR111-12-50D-930-03 | 01401 | 3000 | 50 | 80 | 800 | 50 | 620 | 50 | 95 / 95 | 3 |
| SR111-12-08D-940-03SNAP | 01411 | 4000 | 8 | 14 | 17400 | 50 | 645 | 52 | 95 / 95 | 4 |
| SR111-12-25D-940-03 | 01413 | 4000 | 25 | 40 | 3480 | 50 | 645 | 52 | 95 / 95 | 4 |
| SR111-12-36D-940-03 | 01415 | 4000 | 36 | 60 | 1600 | 50 | 645 | 52 | 95 / 95 | 4 |
| SR111-12-50D-940-03 | 01417 | 4000 | 50 | 80 | 820 | 50 | 645 | 52 | 95 / 95 | 4 |
| SR111-12-08D-950-03SNAP | 01419 | 5000 | 8 | 14 | 17540 | 50 | 650 | 52 | 95 / 90 | 5 |
| SR111-12-25D-950-03 | 01421 | 5000 | 25 | 40 | 3500 | 50 | 650 | 52 | 95 / 90 | 5 |
| SR111-12-36D-950-03 | 01423 | 5000 | 36 | 60 | 1620 | 50 | 650 | 52 | 95 / 90 | 5 |
| SR111-12-50D-950-03 | 01425 | 5000 | 50 | 80 | 840 | 50 | 650 | 52 | 95 / 90 | 5 |
| **SORAA BRILLIANT SERIES** | | | | | | | | | | |
| SR111-12-08D-827-03SNAP | 01387 | 2700 | 8 | 14 | 19840 | 60 | 735 | 59 | 80 / >0 | 3 |
| SR111-12-25D-827-03 | 01389 | 2700 | 25 | 40 | 3960 | 60 | 735 | 59 | 80 / >0 | 3 |
| SR111-12-36D-827-03 | 01391 | 2700 | 36 | 60 | 1820 | 60 | 735 | 59 | 80 / >0 | 3 |
| SR111-12-50D-827-03 | 01393 | 2700 | 50 | 80 | 940 | 60 | 735 | 59 | 80 / >0 | 3 |
| SR111-12-08D-830-03SNAP | 01403 | 3000 | 8 | 14 | 21460 | 60 | 795 | 64 | 80 / >0 | 3 |
| SR111-12-25D-830-03 | 01405 | 3000 | 25 | 40 | 4280 | 60 | 795 | 64 | 80 / >0 | 3 |
| SR111-12-36D-830-03 | 01407 | 3000 | 36 | 60 | 1980 | 60 | 795 | 64 | 80 / >0 | 3 |
| SR111-12-50D-830-03 | 01409 | 3000 | 50 | 80 | 1020 | 60 | 795 | 64 | 80 / >0 | 3 |

*Specifications are at stable warm operating conditions (25°C ambient) **Energy Star Minimum SNAP SORAA SNAP System Compatible

CCT = Correlated Color Temperature CRI = Color Rendering Index (Ra-8) White Point = White Point Accuracy in McA step

## SAFETY NOTE ON HEAT

Although Soraa's lamps operate at cooler temperatures than halogen lamps, it is recommended that gloves be worn when handling bare lamps that have been energized.

Information and specifications subject to change. SR111 12W Rev 1 12.05.14

**Soraa Inc.** 6500 Kaiser Drive, Suite 110, Fremont, CA 94555
855 GO-SORAA / 855 467-6722 www.soraa.com