PAR36 SERIES (6W; Replaces 20-Watt Halogen) (9W; Replaces 35-Watt Halogen) (12W; Replaces 50-Watt Halogen)

Description:

The PAR36 LED lamp has been rede-signed to better fi t into standard, low voltage, PAR36 fi xtures. These LED's are **thermally engineered to operate in enclosed fixtures,** and they also feature our own enhanced **ESD (Electro-Static Discharge) Protection (IEC-61000-4-2),** as well as our own built-in **Heat Overload Protection Technology -** which gives you added security by automatically cooling down (and reducing lumens output) only when exposed to extreme heat (air temperatures above 125ºF). Best of all, there is no color shift when lumens output is reduced, and overall lamp life is improved. When extreme temperatures drop below 125ºF, full lumens output will automatically resume.

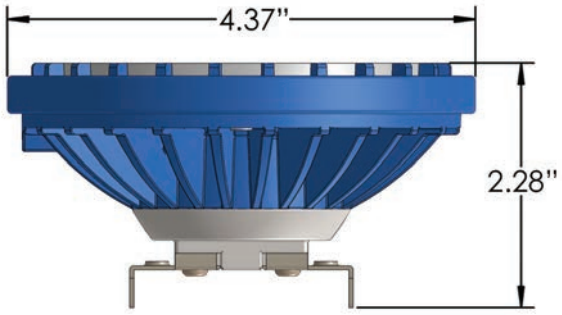

Specifications/Features:

- Enhanced ESD (Electro-Static Discharge) Protection (IEC-61000-4-2)
- Built-In Heat Overload Protection Technology
- UL Listed & FCC Compliant
- Available in 2200, 2700, 3000, & 5700 Kelvin Temperatures, as well as Red, Green, Blue, & Amber
- Available In 15º, 30º, & 60º Beam Angles
- Available In 6 Watts, 9 Watts, & 12 Watts
- 8-25VAC
- IP68
- Maximum Current - 6W: 1.0A; 9W: 1.5A; 12W: 2.0A
- CRI: 85
- CREE Chipset
- 50,000 hours lamp life
- Fully potted PC board
- Dimmable with most magnetic transformers
- Patent Pending

Lumens Output

	2700K	5700K
6W	380lm	460lm
9W	550lm	720lm
12W	620lm	920lm

PART NUMBER: **PAR36 XX XXXX XX**

6
9 WATTAGE
12

2200
2700 KELVIN TEMPERATURE
3000
5700

RED = Red
GREEN = Green COLOR
BLUE = Blue
AMBER = Amber

BEAMSPREAD
15 = 15 degree
30 = 30 degree
60 = 60 degree