Specification Sheet : **HH-MH-MLT4-100**

Fulham HIGH HORSE
MAGNETIC HID BALLASTS

100W M90 60 Hz HX-HPF
Core & Coil Ballast Status: Active

E206503

Mechanical Data:

4.25" x 4.75" CORE-2 COIL UNIT

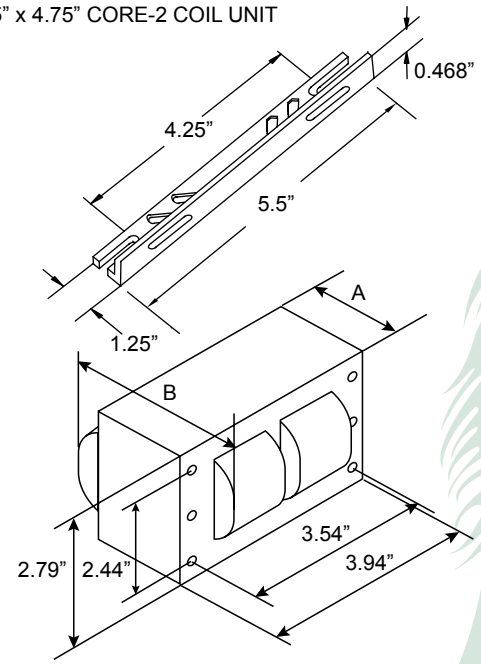

DIMENSION A	1.69 IN
DIMENSION B	3.00 IN
TOTAL WEIGHT	5.73 LBS
LEAD LENGTHS	12 IN

HARDWARE KIT: HH-MH-HDW2 CLAMP: HH-MH-IGCLMP

2 2" Thru-Bolts 4 Flat Washers
2 Lock Washers 2 Nuts

Electrical Data:

INPUT VOLTS	120	208	240	277
MINIMUM STARTING TEMPERATURE	-20˚F or -30˚C			
POWER FACTOR	90%			
ANSI CODE	100 WATT LAMP, M-90			
CIRCUIT TYPE	HX-HPF			
WATTS INPUT	121			
MAX INPUT CURRENT	1.15	0.64	0.55	0.48
NOM. OPEN CURRENT VOLTAGE	250			
RECOMMENDED FUSE (Amps)	3	2	2	2
REGULATION				
LINE VOLTS	±10%			
LAMPS WATTS	±10%			
INPUT WATTS AT LAMP DROPOUT	88	147	178	210
LINE CURRENT (AMPS)				
OPERATING	1.15	0.64	0.55	0.48
OPEN CIRCUIT	0.342	0.200	0.174	0.151
STARTING	0.940	0.536	0.470	0.410
UL TEMPERATURE RATINGS	D	D	E	D
INSULATION CLASS	H(180)			
COIL TEMPERATURE CODE	1029			
CAPACITOR REQUIRMENT				
MFD	10uF			
MIN VOLT	280			
IGNITOR				
PART NUMBER	HHMH-IG70-150			
MAX DIST TO LAMP	2 FT			
60Hz TEST PROCEDURES				
HIGH POTENTIAL TEST (VOLTS)	1 MIN: 2000, 2 SEC: 2500			
OPEN CIRCUIT VOLTAGE TEST (VOLTS)	235-255			
SHORT CIRCUIT CURRENT TEST (AMPS)	1.25-1.65			
SECONDARY CURRENT				
INPUT CURRENT	3.25	1.90	1.65	1.45

Ignitor:

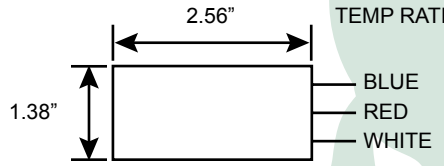

TEMP RATING: 105˚C

Wiring Diagram:

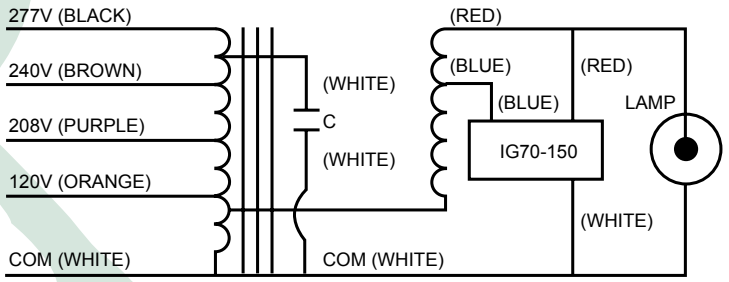

Capacitor:

Wet Capacitor: HHMH-WCAP-100

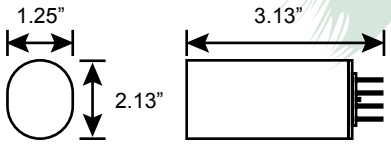

- Operating Temperature to 100° C
- UL-810 Fault Current Protection
- RoHS Compliant
- USA Manufactured to EIA-456-A

Dry Capacitor: HHMH-DCAP-100

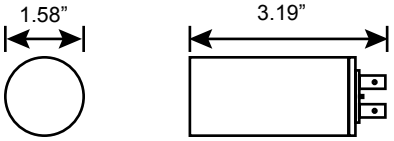

- Operating Temperature to 105° C
- RoHS Compliant
- USA Manufactured to EIA-456-A

Options:

Basic Ballast Kit includes Ballast, Ignitor and Mounting Hardware only.
For capacitor option, add Base Model No. and one Capacitor code:
D = Dry Kit: Ballast + Ignitor + Dry Capacitor + Mounting Hardware
W = Wet Kit: Ballast + Ignitor + Wet Capacitor + Mounting Hardware

HID Ballast and Lamp Kits also available; please see website www.fulham.com.

Fulham Co., Inc extends limited warranty only to the original purchaser or to the first user for the period of **2 years** for the ballast and 1 year for the capacitor and Ignitor from the date of manufacture as indicated by the date code stamped on each product and when properly installed and under normal conditions of use. For additional warranty guide line, please refer to our complete product catalog or call customer service at **1-323-599-5000.**
DUE TO A PROGRAM OF CONTINUOUS IMPROVEMENT, FULHAM Co., INC RESERVES THE RIGHT TO MAKE ANY VARIATION IN DESIGN OR CONSTRUCTION TO THE EQUIPMENT DESCRIBED.
Data is based upon tests performed by Fulham in a controlled environment and representative of relative performance. Actual performance can vary depending on operating conditions.

Address: 12705 S. Van Ness Ave., Hawthorne, CA 90250 **Website:** www.fulham.com To order this product: **Fax:** 1-323-754-9060 **Email:** order@fulham.com