SPECIFICATION SUBMITTAL

MAESTRO® Controls

www.lutron.com/maestro

The High-Tech Multi-Location Dimmer

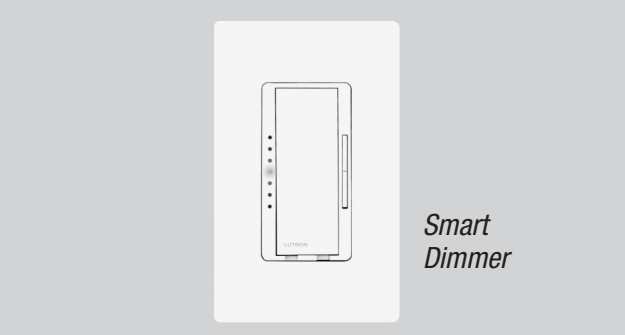

Smart Dimmer

PRODUCT FAMILY FEATURES

- High-tech "Smart Dimmer" with microprocessor technology for a standard designer wallplate opening
- Features a clean, flush, stylish appearance
- Special Features! Two taps on the switch brings lights on to full brightness; press and hold the switch to slowly fade lights to off over 10 seconds
- LED's indicate light level and glow softly as a locator light in the dark
- Multi-location dimming from up to 10 locations
- Uses standard single-pole and 3-way wiring for easy installation in any home
- Raise from off

SPECIFICATION FEATURES

- Power- failure memory
- Frequency compensation
- Includes Radio Frequency Interference suppression
- Front accessible service switch (FASS™) to disconnect load power
- Electrostatic discharge tested
- Precise color matching across all controls

STANDARDS

JOB NAME	AREA CONTROLLED
LOCATION	JOB NUMBER
TITLE	PAGE NO.

MAESTRO CONTROLS

Smart Dimmers **Smart Remotes**

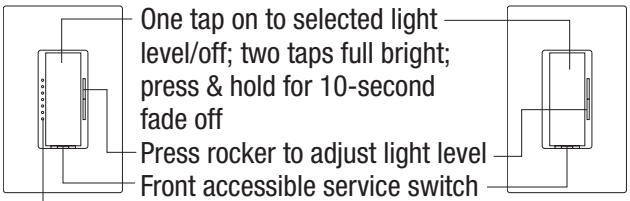

Note: For multi-location dimming only-use one Smart Dimmer (left) with up to nine Smart Remotes

CLARO ACCESSORIES

Rocker Switch

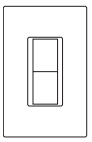

Switch

Receptacles

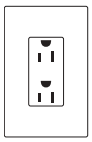

15A Receptacle

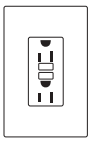

15A GFCI Receptacle

Jacks

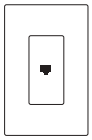

Single Telephone Jack

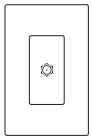

Cable TV Jack

Ports

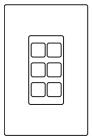

6-Port Frame

Custom Multigang Wallplates

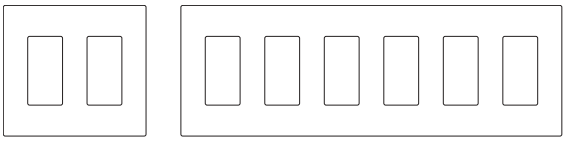

2-gang to 6-gang wallplates

Description		Model #

SMART DIMMERS

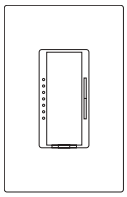

Incandescent

Preset Smart Dimmers

Single Pole/Multi-Location	600W	MA-600-□
Single Pole/Multi-Location	1000W	MA-1000-□

Products above: For multi-location dimming, use one Maestro Smart Dimmer with up to nine Maestro Smart Remotes, MA-R-. Not for use with mechanical 3-way or 4-way switches. Minimum load on dimmer is 40W. Derating required if ganged, see page 5.

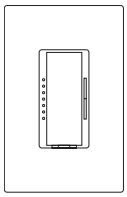

Electronic Low Voltage

Preset Smart Dimmers

Single Pole/Multi-location	600W	MAELV-600-□

Products above: For multi-location dimming, use one Maestro Smart Dimmer with up to nine Maestro Smart Remotes, MA-R-. Requires neutral wire connection. Not for use with mechanical 3-way or 4-way switches. Minimum load on dimmer is 5W. Derating required if ganged, see page 5.

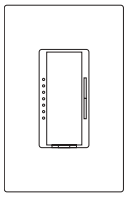

Magnetic Low Voltage

Preset Smart Dimmers

Single Pole/Multi-Location	600VA (450W [1])	MALV-600-□
Single Pole/Multi-Location	1000VA (800W [1])	MALV-1000-□

Products Above: For Multi-location dimming, use one Maestro Smart Dimmer with up to nine Maestro Smart Remotes, MA-R-. Not for use with mechanical 3-way or 4-way switches. Minimum load on dimmer is 40W. Derating required if ganged, see page 5.

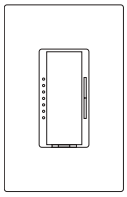

Fluorescent

For control of fluorescent loads, use Lutron Hi-lume®, Eco 10™ line voltage, or Tu-Wire® electronic dimming ballasts with MA-600- and Hi-Power 2• 4•6 dimming module. For a coordinated look, consider using Spacer System dimmers for controlling fluorescent loads.

HI-POWER 2•4•6™ DIMMING MODULES

To increase load capacity up to 30,000W/VA in most popular sources, use one MA-600- and add up to five dimming modules.

SMART REMOTES

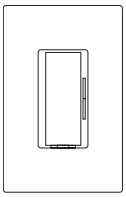

Provide Multi-Location Dimming from up to Nine Additional Locations.

Smart Remotes

Smart Remotes	MA-R-□

For multi-location dimming, use up to nine Smart Remotes with only one of the following Maestro multi-location dimmers: MA-600-, MA-1000-, MAELV-600-, MALV-600-, or MALV-1000-. No derating required if ganged. Maximum traveler wiring run for multi-location applications is 250' (76.2m).

1. Actual lamp wattages.

Description	Rating	Model #
SWITCHES		
General Purpose Switching of all Lighting Sources and Motor Loads		
Single Pole, 120/277V	15A	CA-1PSH-☐
3-way, 120/277V	15A	CA-3PSH-☐
4-way,120/277V	15A	CA-4PSH-☐
Products above: No derating required if ganged.		
ACCESSORIES		
Receptacles		
Receptacle	15A,125V	CAR-15H-☐
GFCI Receptacle	15A,125V	CAR-15-GFCIH-☐
Products above: No derating required if ganged.		
Single Jacks		
A physical barrier (partition) must exist when gangling with line-voltage products		
Single Telephone Jack *Note: Also accepts most 4-conductor plugs*	6-conductor, RJ11	CA-PJH-☐
Single Cable Jack [1]	F-style 75-Ohm, coaxial cable No derating required if ganged.	CA-CJH-☐
Field Customizable Multi-Port Frame		
6-Port Frame	Shipped with 6 blanks *Shown with blanks*	CA-6PF-☐
Product above: For use with Lutron connectors shown below. Also compatible with Hubble Xcelerator™ and snap-fit connectors.		
Connectors		
For use with 6-port frame (CA-6PF-). Each connector fills one port.		
Phone Jack	6-conductor, RJ11, Category 3	CON-1P-C3-WH
Phone Jack	8-conductor, RJ45, Category 5e	CON-1P-C5E-WH
Phone Jack	8-conductor, RJ45, Category 6	CON-1P-C6-WH
Fiber Jack	MT-RJ Feed-Through	CON-1F-MTRJ-WH
Fiber Jack	SC Simplex	CON-1F-SC-WH
Fiber Jack	LC Non-Flush Mount	CON-1F-LC-WH
Fiber Jack	ST Style	CON-1F-ST-WH
Cable Jack	F-Style, 75-Ohm Coaxial cable	CON-1C-WH
BNC Jack	BNC connector	CON-1B-WH

Connectors available in white (WH) only. For information about additional colors contact Lutron Customer Service.

	Description	Model #
	STANDARD WALLPLATES	
	1-Gang W: 2.94” (75mm) x H: 4.69” (119mm) x D: 0.30” (7.6mm)	CW-1-▭
	2-Gang W: 4.75” (121mm) x H: 4.69” (119mm) x D: 0.30” (7.6mm)	CW-2-▭
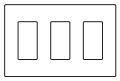	*3-Gang* W: 6.56” (167mm) x H: 4.69” (119mm) x D: 0.30” (7.6mm)	CW-3-▭
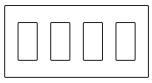	*4-Gang* W: 8.37” (213mm) x H: 4.69” (119mm) x D: 0.30” (7.6mm)	CW-4-▭
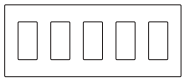	*5-Gang* W: 10.18” (259mm) x H: 4.69” (119mm) x D: 0.30” (7.6mm)	CW-5-▭
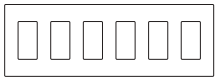	*6-Gang* W: 12.00” (305mm) x H: 4.69” (119mm) x D: 0.30” (7.6mm)	CW-6-▭

STANDARD COLORS/FINISHES

Gloss Finishes (Ships in 48 hours)

Add color/finish suffix to model number to order.
Example: MA-600P-**WH**

WH	White
IV	Ivory
AL	Almond
LA	Light Almond
GR	Gray
BR	Brown
BL	Black

DERATING/MAXIMUM CAPACITY

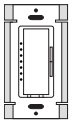

No side sections removed
(Full Capacity)

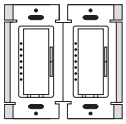

One side section removed
(End Units)

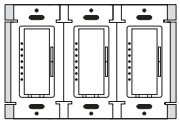

Two side sections removed
(End Units)

Incandescent Dimmers [1]		
600W	500W	400W
1000W	800W	650W

Electronic Low Voltage [2]		
600W	500W	400W

Magnetic Low Voltage [1]		
600VA (450W [2])	500VA (400W [3])	400VA (300W [2])
1000VA (800W [2])	800VA (650W [3])	650VA (500W [2])

DIMENSIONS

Including Claro® wallplates – Wallplates sold separately.

Dimmer

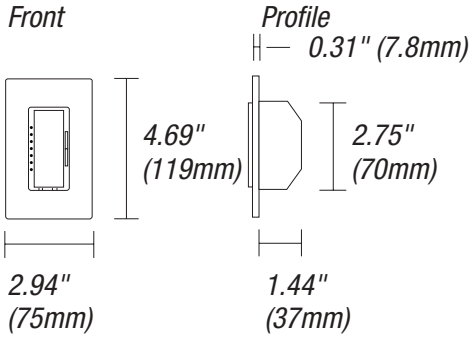

1 Requires 40W minimum load.
2 Requires 5W minimum load.
3 Actual lamp wattage.

WIRING DIAGRAMS

Wiring Diagram 1
Single-Location Wiring

Model #

MA-600-
MA-1000-
MALV-600-
MALV-1000-

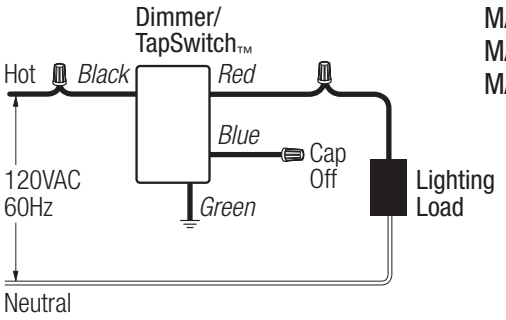

Ground

Wire Connectors

Wiring Diagram 2
Multi-Location Wiring

Model #

MA-R-
MA-600-
MA-1000-
MALV-600-
MALV-1000-

Control Line Side

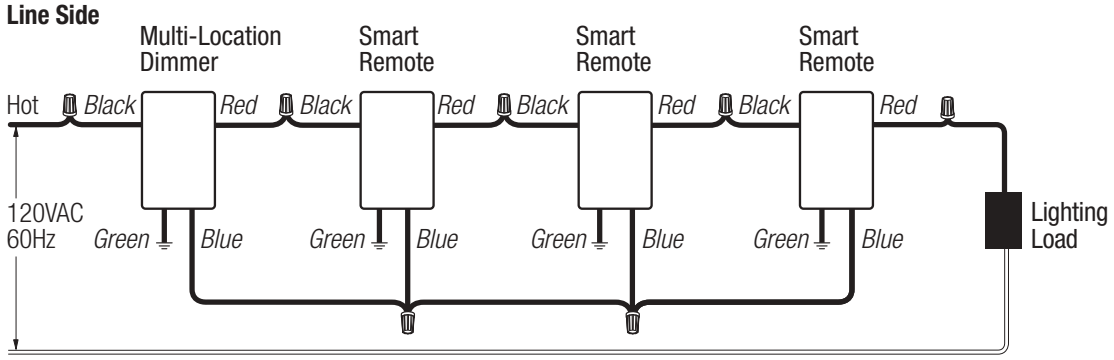

OR

Control Load Side

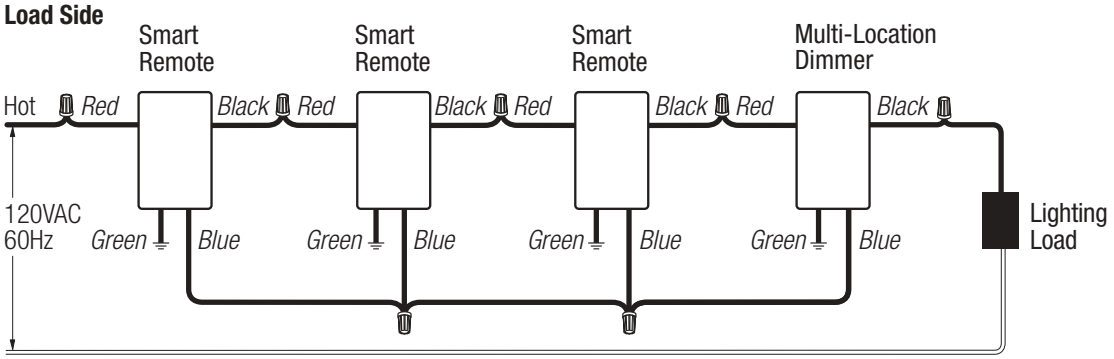

Ground

Wire Connectors

WIRING DIAGRAMS

Wiring Diagram 4
Multi-Location Control with Neutral Used for Single-Location Wiring

Model # MAELV-600-

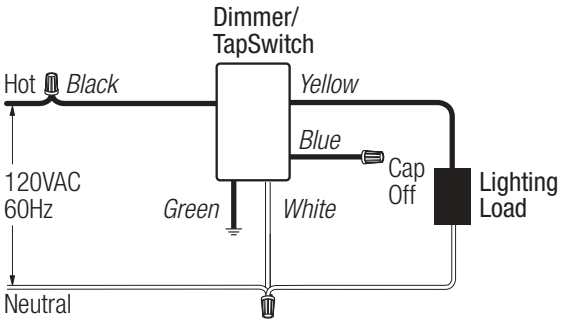

Ground

Wire Connectors

Wiring Diagram 5
Multi-Location Wiring

Model # MAELV-600-MA-R-

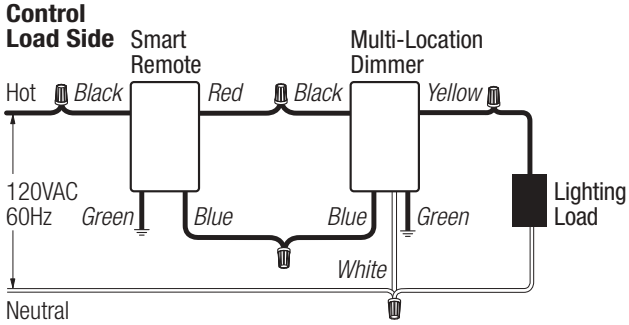

Ground

Wire Connectors

Up to Nine Total MA-R Units

Wiring Diagram 6
Telephone Jack Wiring

Model # CA-PJH-

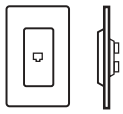

6-Conductor Telephone Jack*

Jack Position	Wire Color
1	*White*
2	*Black*
3	*Red*
4	*Green*
5	*Yellow*
6	*Blue*

*accepts most 4-conductor jacks

Wiring Diagram 7
Receptacle Wiring

Model # CAR-15H-

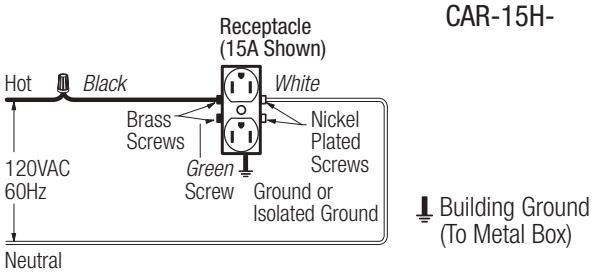

Ground

Wire Connectors

Wiring Diagram 8
GFCI Receptacle Wiring

Model # CAR-15-GFCIH-

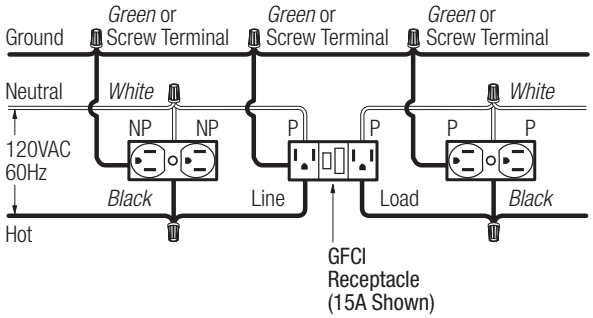

P-Protected
NP-Not Protected

Wire Connectors

MAESTRO CONTROLS AND ACCESSORIES

PART 1 – GENERAL

1.01 SUMMARY

A. Scope: Provide, install and test all switches, dimmers and related devices as specified herein for the areas indicated on the drawings, specifications, and load schedules.

B. Related Sections: Section 16580 (Ballasts), Section 16570 (Dimming Systems).

1.02 REFERENCES

A. UL 1472, CSA, NOM, ISO 9001

1.03 SYSTEM DESCRIPTION AND OPERATION

A. Permanently installed, wallbox mounted switches and dimmers

B. Permanently installed, wallbox mounted receptacles

C. Permanently installed, wallbox mounted data, voice and cable jacks

D. Screwless, seamless wallplates

1.04 SUBMITTALS

A. Submit manufacturer's standard catalog data giving all application, wiring, and installation information on basic components and wallplate kits.

B. Provide test data and/or samples as required to demonstrate conformance with PART 2 of this specification.

1.05 QUALITY ASSURANCE

A. Manufacturer shall have a minimum of 10 years continuous experience in manufacturing wallbox dimming products.

B. Dimmers shall be UL listed, CSA and NOM approved specifically for each required load (i.e., tungsten, electronic low voltage transformer, and magnetic low voltage transformer). Manufacturer shall provide file card or certificate upon request. Universal load-type dimmers shall not be acceptable.

C. Manufacturer shall maintain ISO 9001 certification and provide a copy of the certificate upon request.

1.06 WARRANTY

A. All devices shall be covered by a minimum one-year warranty.

PART 2 – EQUIPMENT

2.01 ACCEPTABLE MANUFACTURERS

A. Lutron Electronics Co., Inc.

B. Unless otherwise noted, all basic components (dimmer, switch, receptacle, telephone jack and cable jack) and wallplate kits shall be provided by one manufacturer.

2.02 EQUIPMENT

A. Controls Lutron Maestro Style

1. Performance

a. Dimmers shall provide full-range, smooth and continuously variable control of light intensity.

b. All dimmers shall be designed to minimize effects of changing line frequency.

c. An actuator, accessible from the front of the unit, with the wallplate attached, shall activate a mechanical air-gap switch disconnecting power from the load during "safety off" condition; no leakage current shall be present at the fixture(s). This front accessible safety switch (FASS™) shall be separate from the tapswitch and raise/lower rocker.

d. Dimmer shall be capable of on/off, raise/lower and mechanical air-gap "safety off" from up to 9 additional locations using aesthetically coordinated remotes.

e. Controls shall meet ANSI/IEEE Std. C62.41-1980, tested to withstand voltage surges of up to 4000V and current surges of up to 200A without damage.

f. Controls shall not be susceptible to damage or loss of memory due to static discharge.

g. Controls shall be capable of operating at the rated capacity; this includes modified capacities for ganging configurations which require the removal of fins. Operation at rated capacity shall be possible across the full ambient temperature range, without shortening design lifetime.

h. Controls shall operate in an ambient temperature range of 0°C (32°F) to 40°C (104°F).

i. Controls shall incorporate power-failure memory. Should power be interrupted and subsequently returned, the lights will come back on to the same levels set prior to the power interruption. Restoration to some other default level is not acceptable.

j. Dimmers shall be designed to reduce interference with radio, audio, and video equipment.

k. To ensure a precise color match between all plastic parts, color variation of any gloss part shall not exceed a just noticeable level, delta E of 1, as defined in ASTM E 308-99.

l. Visible parts of dimmers, switches, standard receptacles, cable jacks or any wallplate shall exhibit ultraviolet stability when tested as defined in ASTM D4674-89.

m. All actuators shall be captured internally to the control.

n. Remotes shall wire using conventional 3-way and 4-way wire runs.
o. Multi-location dimmers without neutral shall be capable of operating in either 3-way switch location.
p. Wall controls shall fit a decorator wallplate opening with a flush tapswitch. Dimmers and remotes shall have a small, raised rocker to the right of the tapswitch. Dimmers shall have seven discrete LEDs to the left of the tapswitch. Tapswitches shall remain flush in both the on and off state. Wall controls shall have a gloss finish.
q. A single tap of the tapswitch shall raise lights from off to the preset light level, or fade light to off. The raise/fade rate shall travel the dimming range in 3 seconds. A rapid double tap of the tapswitch shall raise lights to full-on in 1.5 seconds. Pressing and holding the tapswitch shall activate a delay fade-to-off function. Lights shall fade to off over 10 seconds.
r. The LEDs on the left side of the tapswitch shall indicate light level when the dimmer is on. When the dimmer is off, the LEDs shall glow softly as a night light with the preset level slightly brighter than any of the other LEDs.
s. The rocker on dimmers and remotes shall raise and lower the light level; this new light level becomes the preset. The rocker shall be able to raise the lights from off to low end and up, and shall lower the lights to low-end, not to off.

2. Incandescent Dimmers
   a. Provide incandescent dimmers for direct control of up to 1000 watts.
   b. Dimmers shall have a high-end of no less than 90% of line voltage.
3. Electronic (Solid-State) Low Voltage (ELV) Transformer Dimmers
   a. Provide ELV dimmers for direct control of up to 600 watts of electronic low voltage load.
   b. Dimmers shall contain circuitry specifically designed to control the input of electronic (solid state) low voltage transformers. Dimmers using standard phase control shall not be acceptable.
   c. Dimmers shall have a resettable overload protection that automatically shuts off when dimmer capacity is exceeded. Protection methods that are non-resettable or require the device to be removed from the wall to reset shall not be acceptable.
   d. Dimmers shall be designed to withstand a short, per UL 1472 section 5.10, between load hot and either neutral or ground without damage to the dimmer.
   e. Dimmers shall have a high-end of no less than 90% of line voltage.
4. Magnetic Low Voltage (MLV) Transformer Dimmers
   a. Provide MLV dimmers for direct control of up to 1000VA of magnetic low voltage load.
   b. Dimmers shall contain circuitry specifically designed to control and provide a symmetrical AC waveform to the input of magnetic low voltage transformers per UL1472 section 5.11.
   c. Dimmers shall not cause a magnetic low voltage transformer to operate above the transformers rated operating current or temperature.
   d. Dimmers shall have a high-end of no less than 90% of line voltage.
5. Remote dimming modules for high power loads
   a. Where lighting loads exceed the full rated capacity of single dimmers, provide a Maestro incandescent dimmer driving high power modules. High power module and dimmer shall be from the same manufacturer to ensure compatibility.
   b. High power modules shall be remotely mounted.
   c. High power module shall be rated and UL listed for control of incandescent, electronic low voltage, magnetic low voltage, neon/cold cathode, and fluorescent loads in increments of 2,000 Watts up to 30,000 Watts.
6. Remotes for multi-location control
   a. Remotes shall provide multi-location control and mechanical air-gap switch. All tapswitch and rocker functions shall operate from each remote. Up to 9 remotes may be used with a Maestro dimmer.
   b. Remotes shall not have any LEDs.

B. Accessories Lutron Claro Style
1. Switch Components Lutron Claro Style
   a. Switches shall provide on/off control of any 120/277 VAC load up to 15A. Switches shall be UL Listed as general-use AC switches, Lutron Claro style.
   b. Switches shall be available in single-pole, 3-way and 4-way configurations.
2. Receptacle Components Lutron Claro Style
   a. All receptacles shall be UL Listed, CSA and NOM approved.

Made and printed in U.S.A. 3/03 ©2003

b. Receptacles shall be two pole, three wire ground and rated for 15A at 125VAC. All receptacles shall be NEMA configuration type 5-15R.
c. Ground-fault interrupter receptacles shall be Lutron Claro style with two-pole, three-wire ground and rated 15A at 125VAC Configuration shall be of the duplex type with rectangular NEMA WD-6 design. Receptacles shall have a 5 milliampere ground-fault trip level with "test" and "reset" buttons.

3. Telephone, Cable, Fiber and BNC Jacks Lutron Claro Style
   a. Contractor shall provide an appropriate barrier (partition) to isolate jacks from high-voltage wiring when ganged together. This complies with NEC Articles 800-3 and 820-13.
   b. Telephone jack shall be designed to mate with standard 4- or 6-conductor modular jacks, and be compatible with 2, 4, or 6 conductor lines. Telephone jacks shall meet FCC Part 68, paragraph F standards to ensure compatibility with U.S. telephone systems.
   c. Cable jacks shall be the coaxial type, designed for use with standard 75-Ohm cables.
   d. Fiber jacks shall meet EIA/TIA-568-B.3 specifications for optical, mechanical and environmental performance.
   e. BNC connectors shall be F/F couplers.

C. Wallplates Lutron Claro Style
   1. Wallplates shall be manufactured from durable polycarbonate plastic with gloss finish, and shall attach to the basic components without using exposed hardware or screws.
   2. Multigang wallplates shall provide a continuous, seamless cover for up to six-ganged decorator-style control and accessory combinations with no exposed hardware or screws.
   3. Multigang wallplates shall include an adapter plate for proper device alignment and wallplate attachment.
   4. Control, accessory and wallplate profiles shall not exceed .30 inches from wall surface to faceplate front surface.
   5. To ensure a precise color match between all plastic parts, color variation of any gloss part shall not exceed a just noticeable level, delta E of 1, as defined in ASTM E 308-99.
   6. Visible parts of dimmers, switches, standard receptacles, cable jacks or any wallplate shall exhibit ultraviolet stability when tested as defined in ASTM D4674-89.

2.03 SOURCE QUALITY CONTROL

A. All dimming controls shall be 100% function tested at the time of manufacture. Statistical sampling plan shall not be acceptable.

PART 3 – EXECUTION

3.01 INSTALLATION

A. Contractor shall furnish all devices (dimmers, accessories, & wallplate kits), labor and other services necessary for the proper installation of the devices as indicated on the drawings and specified herein.
B. Contractor shall be responsible for derating dimmer capacity if side sections are removed.
C. Contractor shall run separate neutral wires in 120/208 VAC installations.
D. Contractors shall install all backboxes with a minimum wallbox depth of 2.5 inches.
E. Devices shall be installed utilizing manufacturer's recommended application, wiring and installation instructions.
F. Contractor to provide seamless wallplate covers per specification 2.02 for all devices ganged in a common box. Contractor shall provide barriers within the box where required by code.

3.02 FIELD QUALITY CONTROL

A. Twenty-four hours a day, seven days a week, global customer service and technical hotline available.
B. Supplemental information shall be provided by manufacturer's Internet site.

Lutron Electronics Co., Inc.
7200 Suter Road • Coopersburg, PA 18036 U.S.A.
Made and printed in U.S.A. 2/03 ©2003